US007874440B2

(12) **United States Patent**
Gnepper

(10) **Patent No.: US 7,874,440 B2**
(45) **Date of Patent: Jan. 25, 2011**

(54) **CHILD-RESISTANT PACKAGE**

(75) Inventor: **Maurice R. Gnepper**, Fremont, OH (US)

(73) Assignee: **Rexam Healthcare Packaging Inc.**, Perrysburg, OH (US)

(*) Notice: Subject to any disclaimer, the term of this patent is extended or adjusted under 35 U.S.C. 154(b) by 933 days.

(21) Appl. No.: **11/450,835**

(22) Filed: **Jun. 9, 2006**

(65) **Prior Publication Data**

US 2007/0284372 A1 Dec. 13, 2007

(51) **Int. Cl.**
B65D 55/02 (2006.01)

(52) **U.S. Cl.** **215/222**; 215/216; 215/217; 215/221; 215/223; 215/230; 220/4.21; 206/581; 401/126; 132/293; 132/294; 132/295; 132/300; 132/301

(58) **Field of Classification Search** 215/216, 215/217, 221, 222, 223, 330; 220/4.21; 206/581; 132/293, 294, 295, 300, 301; 401/126
See application file for complete search history.

(56) **References Cited**

U.S. PATENT DOCUMENTS

4,093,103	A	6/1978	Mumford	
4,149,646	A	4/1979	Julian	
4,273,248	A	6/1981	Lehmann	
5,160,057	A	11/1992	Fitjer	
5,230,433	A	7/1993	Hamilton et al.	
5,238,130	A	8/1993	Marques et al.	
5,297,732	A *	3/1994	Hahn	239/55
5,377,858	A	1/1995	Morris, Sr.	
5,687,863	A	11/1997	Kusz	
5,722,546	A	3/1998	Briere	
5,836,467	A	11/1998	Montgomery	
5,865,330	A *	2/1999	Buono	215/216
5,992,656	A	11/1999	Dujardin et al.	
6,003,700	A	12/1999	Julian et al.	
6,036,036	A	3/2000	Bilani et al.	
6,112,921	A *	9/2000	Robinson	215/216
6,367,640	B1	4/2002	Julian	
6,709,325	B2	3/2004	Korsen	
6,871,752	B2	3/2005	Montgomery	
2003/0047937	A1 *	3/2003	Chaduc et al.	283/81
2004/0222181	A1	11/2004	Biesecker et al.	
2005/0106340	A1 *	5/2005	Baker	428/34.1

* cited by examiner

Primary Examiner—Anthony Stashick
Assistant Examiner—Elizabeth Volz
(74) *Attorney, Agent, or Firm*—Reising Ethington PC

(57) **ABSTRACT**

A child-resistant package includes first and second elements having base walls with rectangular peripheries, continuous peripheral walls extending around the peripheries, locking projections or tabs on opposed sections of the peripheral walls, and cylindrical walls extending from the base walls within the peripheral walls and having thread segments. The second element is threadable onto the first element to bring the peripheral walls into aligned abutment and the locking tabs into engagement with the locking projections to resist unthreading of the elements. The peripheral wall of the second element is inwardly flexible and resilient adjacent to the locking tabs to permit manual movement of the locking tabs inward from the locking projections so that the elements can be unthreaded from each other.
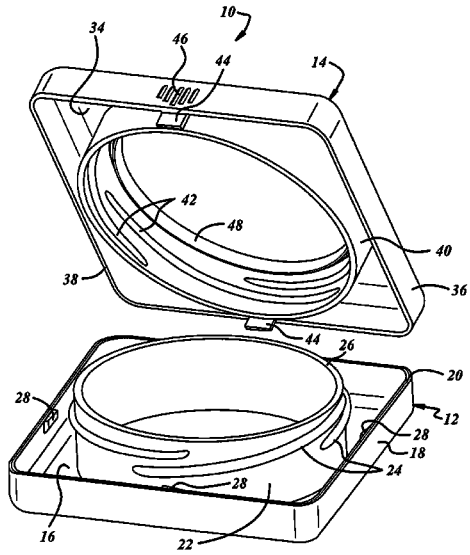
22 Claims, 6 Drawing Sheets