US006367640B1

(12) **United States Patent**
Julian

(10) **Patent No.: US 6,367,640 B1**
(45) **Date of Patent: Apr. 9, 2002**

(54) **CONTAINER AND CLOSURE CAP**

(75) Inventor: **Randall K. Julian**, Newburgh, IN (US)

(73) Assignee: **Rexam Medical Packaging Inc.**, Evansville, IN (US)

(*) Notice: Subject to any disclaimer, the term of this patent is extended or adjusted under 35 U.S.C. 154(b) by 0 days.

(21) Appl. No.: **09/391,788**

(22) Filed: **Sep. 8, 1999**

(51) **Int. Cl.**[7] **B65D 41/04**
(52) **U.S. Cl.** **215/329**; 215/44; 215/334
(58) **Field of Search** 215/329, 334, 215/44, 45; 220/288, 289

(56) **References Cited**

U.S. PATENT DOCUMENTS

3,589,550	A	*	6/1971	Rossmann	220/288
3,640,416	A	*	2/1972	Temple	215/329
3,841,514	A		10/1974	Montgomery et al.	
3,877,597	A		4/1975	Montgomery et al.	
3,904,063	A	*	9/1975	Hauser	215/318
4,190,171	A	*	2/1980	Kulle et al.	215/329
4,231,480	A	*	11/1980	Spransy	215/329
4,423,821	A	*	1/1984	McIntosh	215/329
4,526,284	A	*	7/1985	Herbert	215/329
4,591,063	A	*	5/1986	Geiger	215/330
4,623,070	A	*	11/1986	Nishikawa	215/329
4,069,937	A		1/1989	Smalley	
4,844,250	A	*	7/1989	Holoubek et al.	222/107
5,020,683	A	*	6/1991	Stassheimer	215/354
5,722,545	A	*	3/1998	Rinne	215/44
5,871,111	A	*	2/1999	Pfefferkorn et al.	215/307
6,059,134	A	*	5/2000	Long, Jr.	215/252
6,105,801	A	*	8/2000	Minnette	215/45

FOREIGN PATENT DOCUMENTS

EP	0787660 A1		6/1997	
GB	2011869 B		11/1982	
GB	2105693 B		3/1983	
GB	2251240 A		1/1992	
JP	406247455	*	9/1994	215/329

* cited by examiner

Primary Examiner—Lee Young
Assistant Examiner—Joseph C. Merek
(74) *Attorney, Agent, or Firm*—John F. Salazar; Middleton Reutlinger

(57) **ABSTRACT**

A container **(1)** having an open-ended and externally screw threaded cylindrical neck **(4)** is fitted with a closure cap **(2)** having an internal screw thread **(10)** adapted to cooperate with the thread **(7)** on the container neck and a planar end wall **(8)** adapted to form a seal with the open end **(6)** of the container neck. At least one of the opposing surfaces of the screw threads on the cap and the container neck is sufficiently inclined to the plane perpendicular to the axis of the neck of the container at an angle of at least 60° so that the screw threads can slip laterally on one another to enable the side wall of the cap or the neck of the container to deform when the cap is tightened onto the container to form a seal.
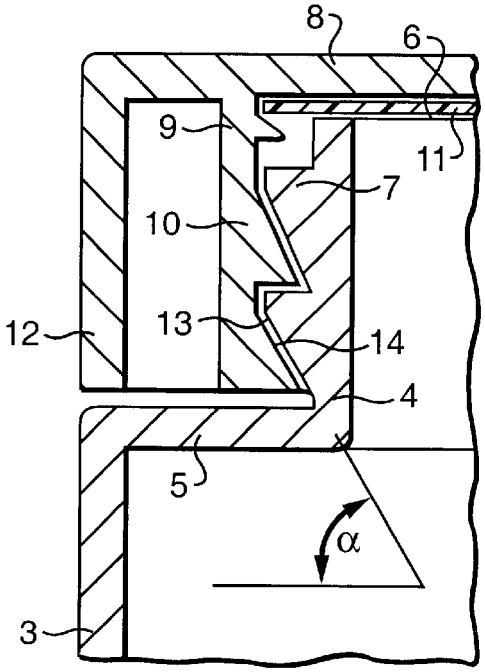
16 Claims, 1 Drawing Sheet