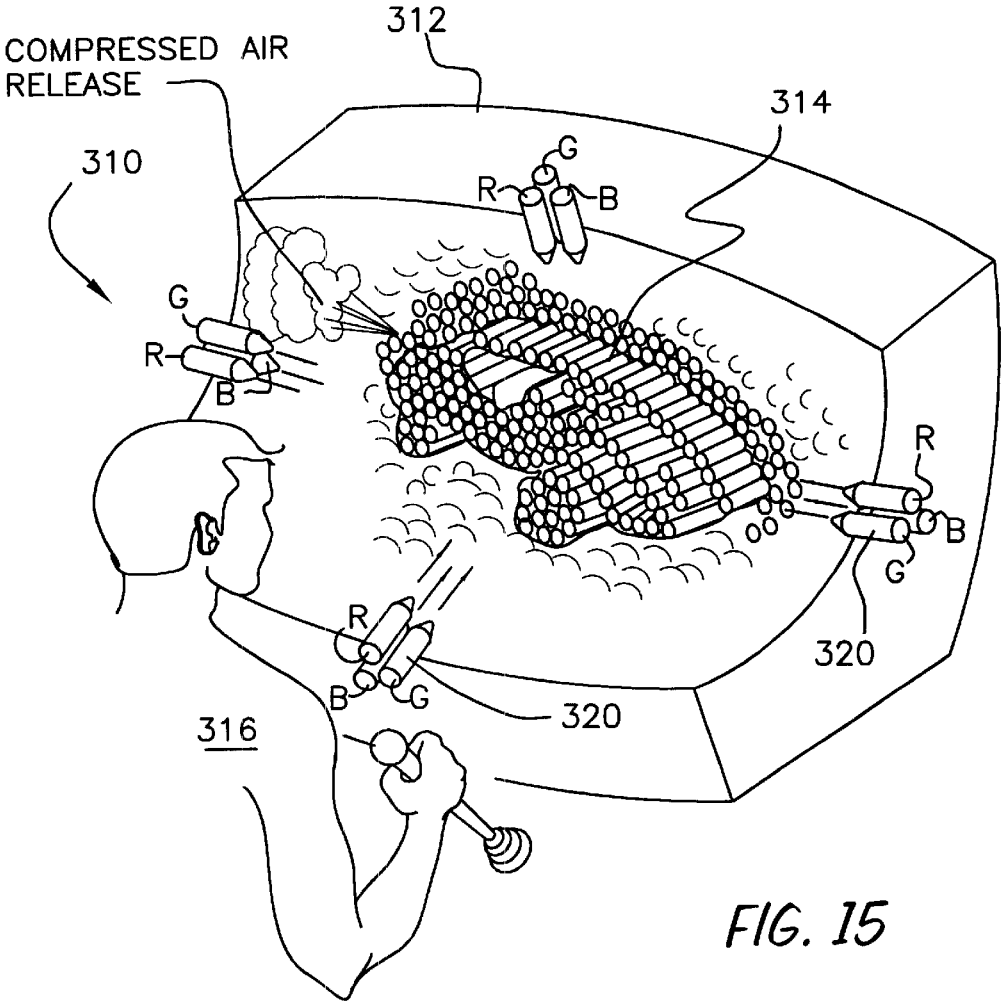
COMPRESSED AIR
RELEASE
312
314
310
G
R
B
G
R
B
R
B
G
R
B
G
320
320
316

FIG. 15

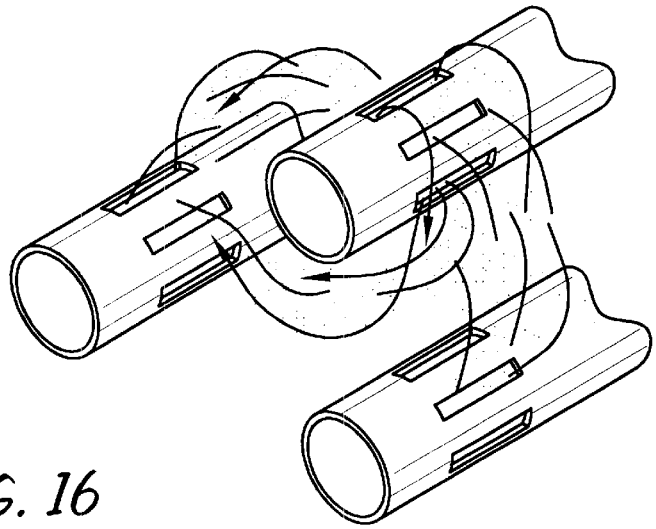

FIG. 16