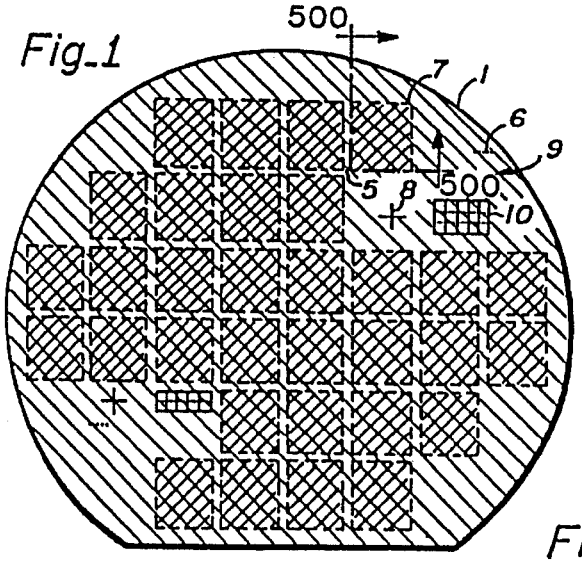

Fig_1

Fig_2

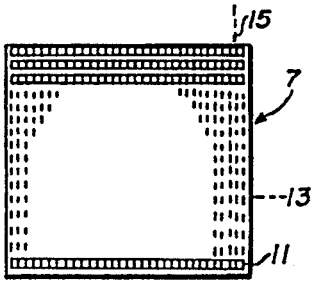

Fig_3a

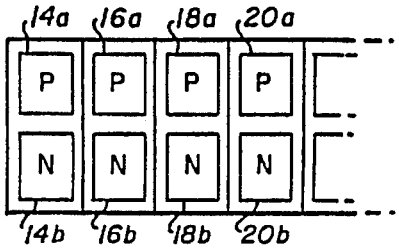

Fig_3b

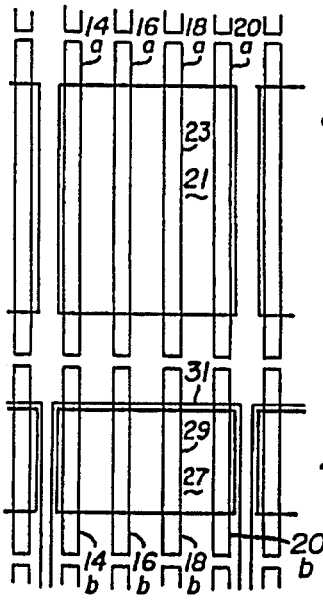

Fig_4a

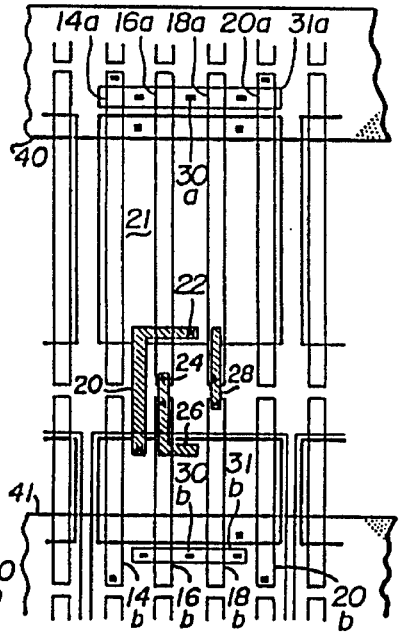

Fig_4b

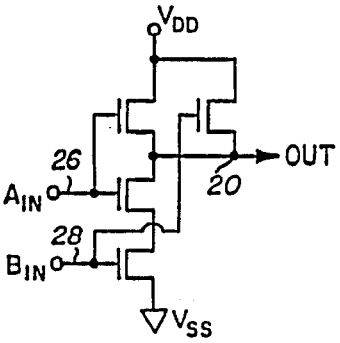

Fig_4c

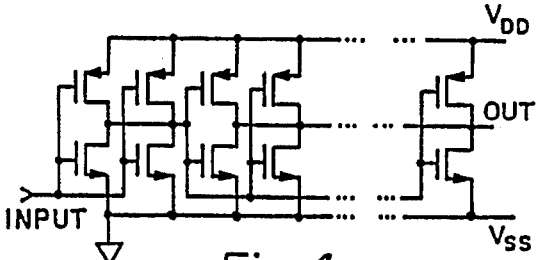

Fig_4e

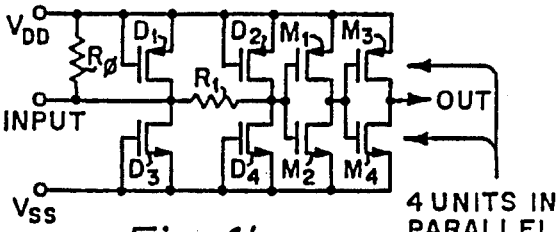

Fig_4h