Sept. 16, 1958 G. W. BAKER 2,851,740

WALL CONSTRUCTION

Filed April 15, 1953

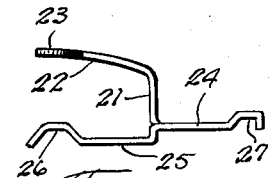

Fig. 6.

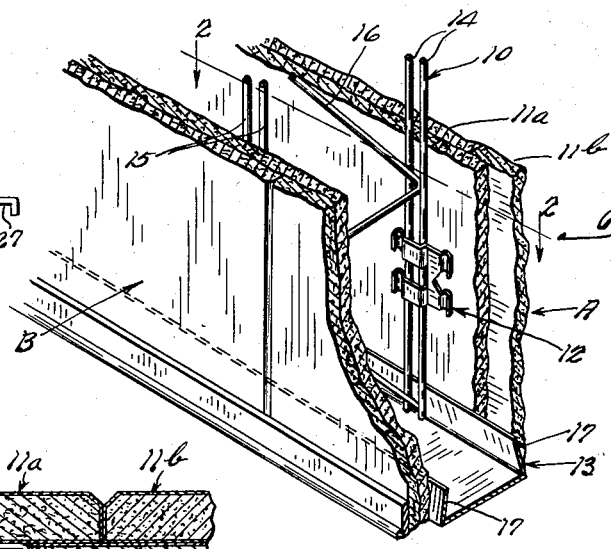

Fig. 1.

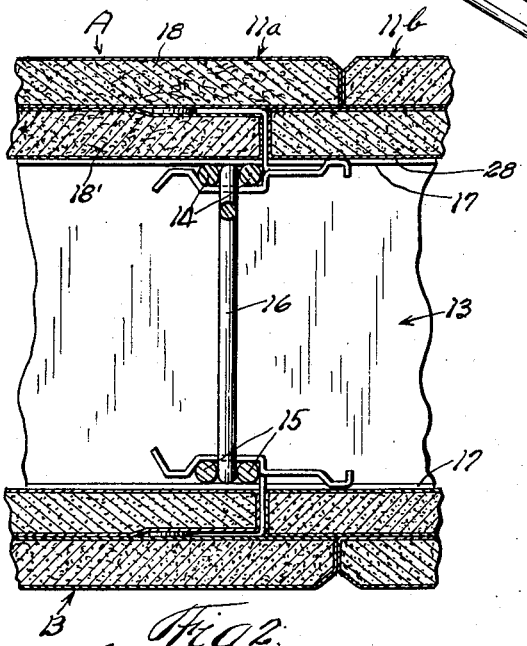

Fig. 2.

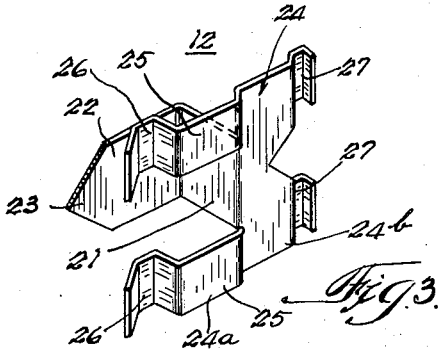

Fig. 3.

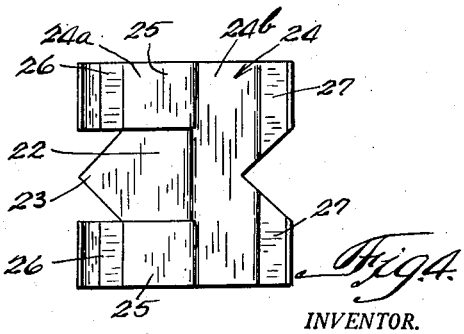

Fig. 4.

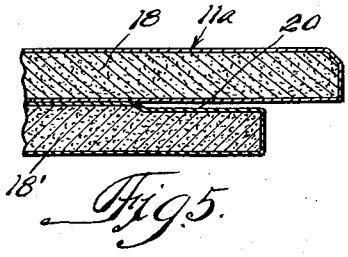

Fig. 5.

INVENTOR.

George W. Baker.

BY.

Thiess, Olson, Mecklenburger, von Holst, + Coltman. Attys.