US009638340B2

(12) **United States Patent**
**Bachofer**

(10) **Patent No.: US 9,638,340 B2**
(45) **Date of Patent: May 2, 2017**

(54) **DISC VALVE**

(71) Applicant: **MACK & SCHNEIDER GmbH**, Filderstadt (DE)

(72) Inventor: **Steffen Bachofer**, Filderstadt (DE)

(73) Assignee: **MACK & SCHNEIDER GMBH**, Filderstadt (DE)

( * ) Notice: Subject to any disclaimer, the term of this patent is extended or adjusted under 35 U.S.C. 154(b) by 50 days.

(21) Appl. No.: **14/706,131**

(22) Filed: **May 7, 2015**

(65) **Prior Publication Data**

US 2015/0233482 A1 Aug. 20, 2015

**Related U.S. Application Data**

(63) Continuation of application No. PCT/EP2013/073223, filed on Nov. 7, 2013.

(30) **Foreign Application Priority Data**

Nov. 7, 2012 (DE) ..... 10 2012 022 211

(51) **Int. Cl.**
***F16K 3/08*** (2006.01)
***F16K 11/074*** (2006.01)
***F16K 27/04*** (2006.01)

(52) **U.S. Cl.**
CPC ... ***F16K 11/0743*** (2013.01); *Y10T 137/86533* (2015.04); *Y10T 137/86823* (2015.04); *Y10T 137/86831* (2015.04)

(58) **Field of Classification Search**
CPC .... F16K 11/074; F16K 27/045; F16K 27/048; F16K 3/08; Y10T 137/86533;
(Continued)

(56) **References Cited**

U.S. PATENT DOCUMENTS

5,022,429 A * 6/1991 Rollini ..... E03C 1/104 137/218
5,398,717 A * 3/1995 Goncze ..... F16K 3/08 137/270

(Continued)

FOREIGN PATENT DOCUMENTS

DE EP 0221231 A1 * 5/1987 ..... B60T 15/02
DE EP 0265537 A1 * 5/1988 ..... F16K 3/08

(Continued)

OTHER PUBLICATIONS

International Search Report of corresponding International Application No. PCT/EP2013/073223, mailed on Feb. 20, 2014.

(Continued)

*Primary Examiner* — Marina Tietjen
*Assistant Examiner* — Seth W MacKay-Smith
(74) *Attorney, Agent, or Firm* — Edell, Shapiro & Finnan LLC

(57) **ABSTRACT**
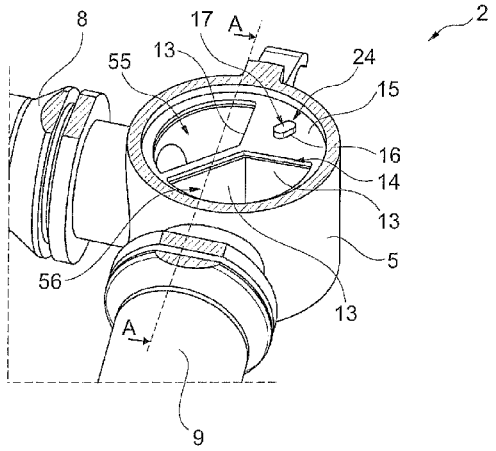
A multiway control valve is provided having a housing that has an inlet connection and an outlet connection for a liquid and/or gaseous medium, a rotatably mounted ceramic valve disc, which is arranged with a first through-flow opening and rotatably mounted in the housing to fluidically connect and disconnect from each other the connections depending on its rotational position. The valve disc rests flatly on a ceramic sealing disc, arranged in a torque-proof manner and having two second through-flow openings, and a sealing element, which is arranged between the sealing disc and an intermediate floor of the housing and is elastically deformable. The sealing element has a disc shape and has third through-flow openings that are aligned with the second through-flow openings. The intermediate floor has at least one retaining projection that engages in one of the three through-flow
(Continued)