Dec. 6, 1955 H. T. BORGSTROM 2,725,740

JOINT BLENDER

Filed July 3, 1952

Fig. 1

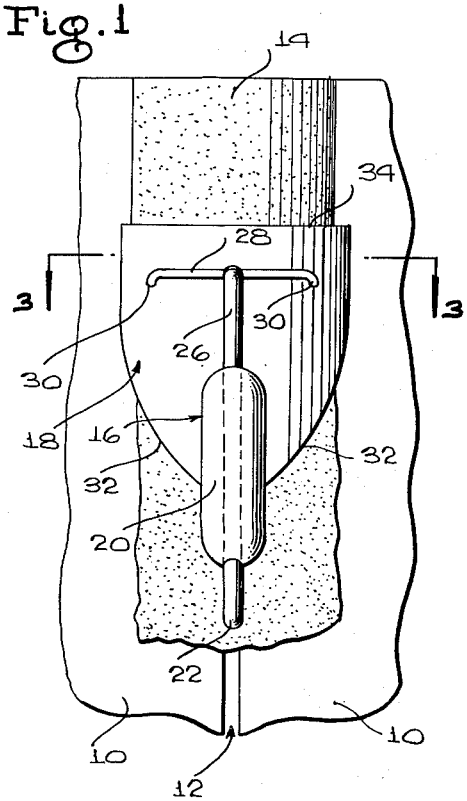

Fig. 2

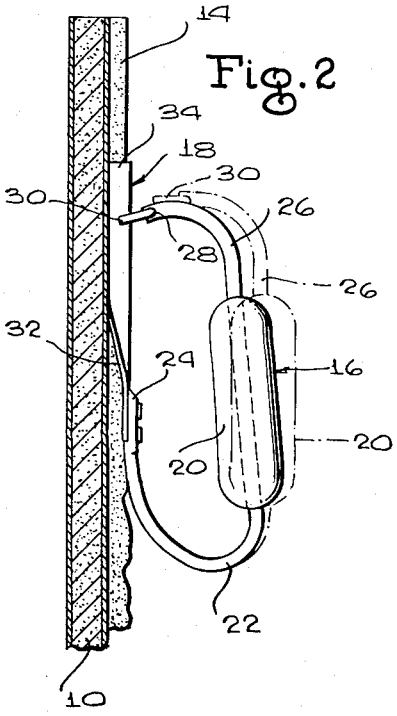

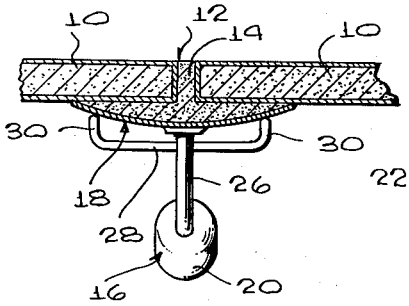

Fig. 3

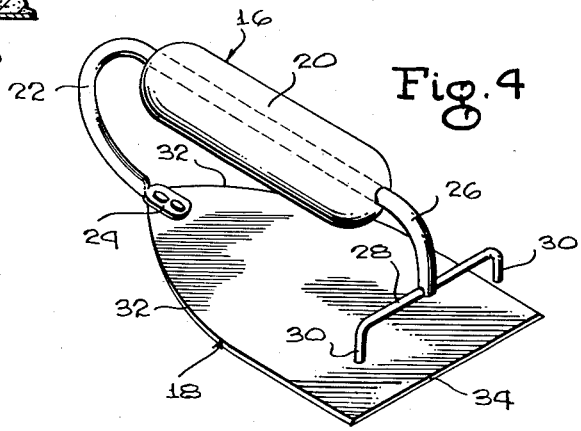

Fig. 4

INVENTOR.
HERBERT T. BORGSTROM
BY

McMorrow, Berman + Davidson
ATTORNEYS