US006923540B2

(12) **United States Patent**
Ye et al.

(10) **Patent No.: US 6,923,540 B2**
(45) **Date of Patent: Aug. 2, 2005**

(54) **TORIC MULTIFOCAL CONTACT LENSES**

(75) Inventors: **Ming Ye**, Fort Worth, TX (US); **Joseph Michael Lindacher**, Lawrenceville, GA (US)

(73) Assignee: **Novartis AG**, Basel (CH)

(*) Notice: Subject to any disclaimer, the term of this patent is extended or adjusted under 35 U.S.C. 154(b) by 25 days.

(21) Appl. No.: **10/616,376**

(22) Filed: **Jul. 9, 2003**

(65) **Prior Publication Data**

US 2004/0021824 A1 Feb. 5, 2004

Related U.S. Application Data

(60) Provisional application No. 60/400,254, filed on Jul. 31, 2002.

(51) **Int. Cl.**[7] **G02C 7/04**
(52) **U.S. Cl.** **351/161**; 351/177
(58) **Field of Search** 351/161, 177

(56) **References Cited**

U.S. PATENT DOCUMENTS

4,095,878	A	6/1978	Fanti	351/161
4,580,882	A	4/1986	Nuchman et al.	351/161
4,636,049	A	1/1987	Blaker	351/161
4,752,123	A	6/1988	Blaker	351/161
4,869,587	A	9/1989	Breger	351/161
4,890,913	A	1/1990	De Carle	351/161
4,936,672	A	6/1990	Capez	351/161
4,971,432	A	11/1990	Koeniger	351/161
4,976,534	A	12/1990	Miege et al.	351/161
5,125,729	A	6/1992	Mercure	351/161
5,141,301	A	8/1992	Morstad	351/161
5,172,143	A	12/1992	Baude et al.	351/177
5,214,453	A	5/1993	Giovanzana	351/161
5,406,341	A	4/1995	Blum et al.	351/160
5,422,687	A	6/1995	Tanaka et al.	351/161
5,517,259	A	5/1996	Blum et al.	351/160
5,528,321	A	6/1996	Blum et al.	351/160

(Continued)

FOREIGN PATENT DOCUMENTS

EP	0 980 015	2/2000
EP	0 996 024	4/2000
JP	08220487 A	8/1996
WO	WO 01/25290	4/2001
WO	WO 01/51978	7/2001

OTHER PUBLICATIONS

International Search Report

Primary Examiner—Scott J. Sugarman
(74) *Attorney, Agent, or Firm*—Jian Zhou; Robert J. Gorman

(57) **ABSTRACT**

The present invention provides a toric multifocal contact lens having a cylindrical optical power to correct astigmatism vision errors and a multifocal power to compensate for presbyopia. A toric multifocal contact lens of the invention has a central axis, an anterior surface having a first central optical zone, and an opposite posterior surface having a second central optical zone. The first central optical zone and the second central optical zone combine to provide a cylindrical optical power to correct astigmatism vision errors and a multifocal power to compensate for presbyopia.
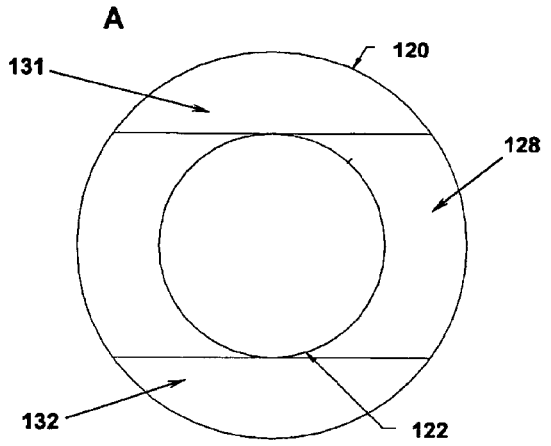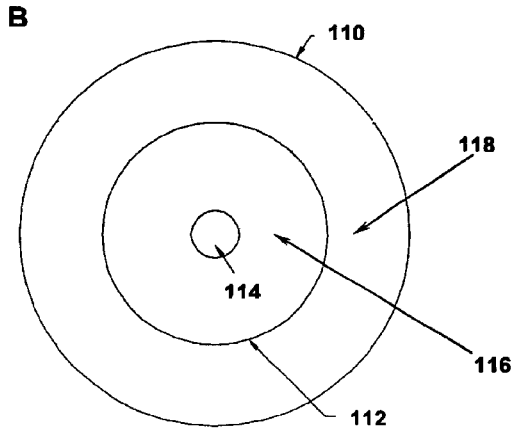
50 Claims, 2 Drawing Sheets