United States Patent [19]

Coons

[11] **3,819,040**

[45] **June 25, 1974**

[54] **PRESSURIZED STORAGE CONTAINER**

[76] Inventor: **Gex B. Coons,** 5641 Colfax Ave., No. 137, Arleta, Calif. 91601

[22] Filed: **Sept. 14, 1972**

[21] Appl. No.: **289,087**

[52] **U.S. Cl.** ..... **206/1 R,** 206/46 B, 220/8, 220/39 B, 220/46 P, 273/61 D

[51] **Int. Cl.**.. **B65d 41/04,** B65d 53/00, B65d 85/00

[58] **Field of Search**..... 206/1 R, 46 B; 220/46 P, 220/46 R, 39 R, 39 B, 8; 273/61 D; 215/40, 43 R, 81

[56] **References Cited**

UNITED STATES PATENTS

2,712,394	7/1955	Koschatzky	206/48 B X
3,286,868	11/1966	Mumford	215/40
3,305,119	2/1967	Reynolds	215/40
3,415,357	12/1968	Van Netter et al.	206/46 B
3,581,881	6/1971	Hobbs	206/1 R

FOREIGN PATENTS OR APPLICATIONS

555,546	4/1958	Canada	206/46 B

Primary Examiner—William I. Price
Assistant Examiner—Steven E. Lipman
Attorney, Agent, or Firm—Robert E. Geauque

[57] **ABSTRACT**

A container for holding contents under air pressure wherein the container basically comprises abody and a cap, a threaded connection being established between the cap and the body, upon initial location of the cap upon the body an air-tight seal is established therebetween, as the cap is tightened upon the body air pressure is caused to increase within the container.
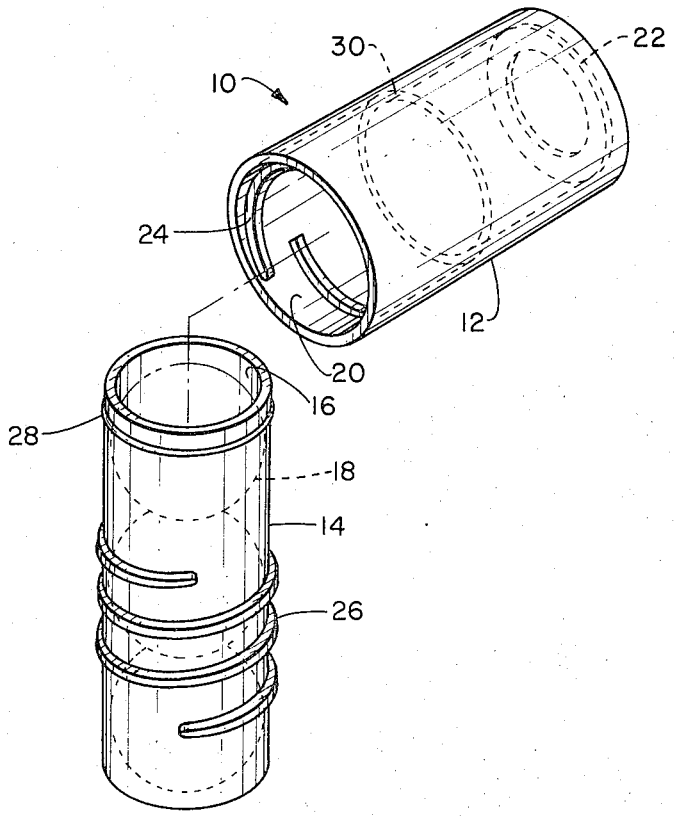
7 Claims, 4 Drawing Figures