US005317140A

United States Patent [19]

Dunthorn

[11] Patent Number: 5,317,140

[45] Date of Patent: May 31, 1994

[54] DIFFUSION-ASSISTED POSITION LOCATION PARTICULARLY FOR VISUAL PEN DETECTION

[76] Inventor: David I. Dunthorn, 908 W. Outer Dr., Oak Ridge, Tenn. 37830

[21] Appl. No.: 980,915

[22] Filed: Nov. 24, 1992

[51] Int. Cl.[5] G01V 9/04

[52] U.S. Cl. 250/221; 250/206.1

[58] Field of Search 250/221, 222.1, 216, 250/561, 206.2, 206.3, 203.3, 203.4; 340/710, 712; 356/141, 152

[56] References Cited

U.S. PATENT DOCUMENTS

2,986,596	5/1961	Hammond, Jr.	178/5.6
3,114,283	12/1963	Gruner	88/24
3,411,010	11/1968	Genahr et al.	250/227
3,411,011	11/1968	Genahr et al.	250/227
3,441,738	4/1969	Dosch et al.	250/219
3,455,637	7/1969	Howard	356/204
3,476,482	11/1969	Howard et al.	356/199
3,535,537	10/1970	Powell	250/227
3,584,142	6/1971	Schoeffler	178/6.8
3,673,327	6/1972	Johnson et al.	178/18
3,953,131	4/1976	Britz	356/141
4,052,616	10/1977	Keller	250/353
4,459,022	7/1984	Morey	356/152
4,491,727	1/1985	Appelbaum	250/203
4,507,557	3/1985	Tsikos	250/341
4,547,666	10/1985	Heal	250/227
4,550,250	10/1985	Mueller et al.	250/203
4,561,017	12/1985	Greene	358/93
4,565,999	1/1986	King	340/706
4,625,108	11/1986	Nestel et al.	250/227
4,648,052	3/1987	Friedman et al.	364/550
4,654,648	3/1987	Herrington	340/710
4,682,024	7/1987	Halldorsson	250/225
4,682,159	7/1987	Davison	340/709
4,688,933	8/1987	Lapeyre	356/1
4,737,625	4/1988	Sasaki et al.	250/221
4,746,770	5/1988	McAlvinny	178/18
4,782,328	11/1988	Denlinger	340/365
4,806,747	2/1989	Dunavan et al.	250/206.1
4,811,004	3/1989	Person et al.	340/712
4,820,050	4/1989	Griffin	356/375
4,891,508	1/1990	Campbell	250/221
4,891,630	1/1990	Friedman et al.	340/706
4,936,683	6/1990	Purcell	356/152
4,943,806	7/1990	Masters et al.	341/31
4,949,079	8/1990	Loebner	340/706
4,986,662	1/1991	Bures	356/375
4,988,981	1/1991	Zimmerman et al.	340/709
5,055,840	10/1991	Bartlett	341/31
5,073,770	12/1991	Lowbner	340/706
5,079,414	1/1992	Martin	250/206.2

FOREIGN PATENT DOCUMENTS

166384 8/1991 China .

OTHER PUBLICATIONS

Western Electric Technical Digest No. 22, Apr., 1971.

IBM Technical Disclosure Bulletin, vol. 23, No. 7B, Dec., 1980.

Primary Examiner—David C. Nelms

Attorney, Agent, or Firm—Luedeka, Neely & Graham

[57] ABSTRACT

Systems and methods for optically determining the direction of an object, such as a pointer, relative to an imaging system, particularly systems where triangulation is employed to determine the location of a pointer within a generally planar viewing field, such as a touch screen. Rather than employing focused imaging systems to produce a sharp image at the plane of a photodetector, and to thus define the visual pen for finger position, a deliberately diffuse or blurred image is employed. The diffusion produces a characteristic "bell-shaped" or Gaussian intensity distribution. By recognizing the characteristic intensity distribution, the position of the maximum intensity, and thus the direction of the object, can be determined to a small fraction of the distance between sample points, with an accordingly much higher resolution than focused systems. In a preferred embodiment, the position location system is incorporated into a computer system as a touch screen apparatus and a cursor is displayed on the screen as soon as a pointer is detected above the display.
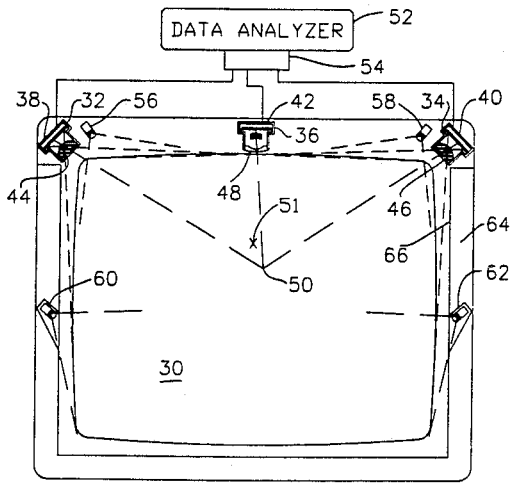
40 Claims, 6 Drawing Sheets