US009411040B2

(12) **United States Patent**
Finck

(10) **Patent No.: US 9,411,040 B2**
(45) **Date of Patent: Aug. 9, 2016**

(54) **SYSTEMS AND METHODS FOR ACOUSTIC WINDOWS**

(71) Applicant: **GOODRICH CORPORATION**, Charlotte, NC (US)

(72) Inventor: **Darren G. Finck**, Jacksonville, FL (US)

(73) Assignee: **GOODRICH CORPORATION**, Charlotte, NC (US)

(*) Notice: Subject to any disclaimer, the term of this patent is extended or adjusted under 35 U.S.C. 154(b) by 32 days.

(21) Appl. No.: **14/312,176**

(22) Filed: **Jun. 23, 2014**

(65) **Prior Publication Data**

US 2015/0369907 A1 Dec. 24, 2015

(51) **Int. Cl.**

B06B 3/04	(2006.01)
G01S 7/521	(2006.01)
G10K 11/00	(2006.01)
G10K 11/02	(2006.01)
B06B 3/00	(2006.01)

(52) **U.S. Cl.**

CPC ***G01S 7/521*** (2013.01); ***G10K 11/006*** (2013.01); ***G10K 11/02*** (2013.01); *Y10T 29/49828* (2015.01)

(58) **Field of Classification Search**

USPC 181/290, 289, 294, 284, 402, 198; 367/152, 191, 176

See application file for complete search history.

(56) **References Cited**

U.S. PATENT DOCUMENTS

2,430,013 A * 11/1947 Hansell G10K 11/02 181/402
2,444,911 A * 7/1948 Benioff G10K 11/004 181/198
2,960,175 A * 11/1960 McMillan E04B 1/82 181/198
3,038,551 A * 6/1962 McCoy G10K 11/004 181/198
3,120,875 A * 2/1964 Graner G10K 11/004 181/198
3,123,176 A * 3/1964 Greenberg G10K 11/004 181/198
3,687,219 A * 8/1972 Langlois G10K 11/30 181/176
3,718,032 A * 2/1973 Gray G01N 29/06 367/152
3,858,165 A * 12/1974 Pegg G10K 11/006 181/402
4,016,530 A * 4/1977 Goll G10K 11/02 181/402
4,062,422 A * 12/1977 Phelps, Jr. G10K 11/02 181/198
4,770,267 A * 9/1988 Hauser G10K 11/006 181/0.5
4,784,898 A * 11/1988 Raghava B29C 70/08 428/408
4,821,243 A * 4/1989 Caprette, Jr. G10K 11/205 181/198
4,997,705 A 3/1991 Caprette, Jr. et al.
5,175,709 A * 12/1992 Slayton G10K 11/002 310/326
5,276,658 A * 1/1994 Bullat G10K 11/02 367/173

(Continued)

OTHER PUBLICATIONS

Extended European Search Report dated Oct. 26, 2015 in European Application No. 15172073.7.

Primary Examiner — Edgardo San Martin
(74) *Attorney, Agent, or Firm* — Snell & Wilmer L.L.P.

(57) **ABSTRACT**

Systems and methods for acoustic windows are disclosed. An acoustic window may include a structural core and a non-structural tuning layer. The structural core may include a carbon reinforced composite, and the non-structural tuning layer may include an epoxy. The structural core may have local minima for insertion loss. The epoxy may increase a bandwidth about the minima of frequencies which are subject to relatively low insertion loss.
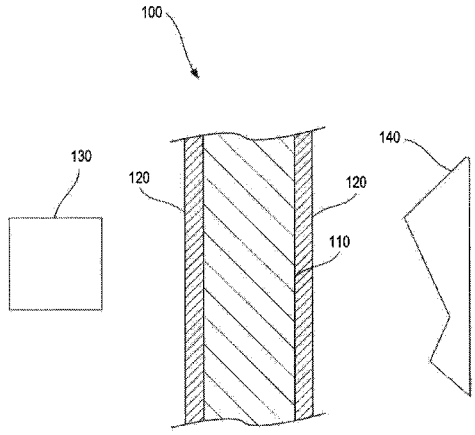
12 Claims, 3 Drawing Sheets