US009410640B2

(12) **United States Patent**
Mayer et al.

(10) **Patent No.: US 9,410,640 B2**
(45) **Date of Patent: Aug. 9, 2016**

(54) **VALVE OF A STORAGE DEVICE HAVING A SPRING ELEMENT**

(71) Applicant: **Robert Bosch GmbH**, Stuttgart (DE)

(72) Inventors: **Franz Mayer**, Haldenwang (DE); **Klaus-Peter Schmoll**, Lehrensteinsfeld (DE); **Dietmar Kratzer**, Tamm (DE); **Edgar Kurz**, Heilbronn-Horkheim (DE)

(73) Assignee: **Robert Bosch GmbH**, Stuttgart (DE)

(*) Notice: Subject to any disclaimer, the term of this patent is extended or adjusted under 35 U.S.C. 154(b) by 186 days.

(21) Appl. No.: **14/049,612**

(22) Filed: **Oct. 9, 2013**

(65) **Prior Publication Data**

US 2014/0102089 A1 Apr. 17, 2014

(30) **Foreign Application Priority Data**

Oct. 11, 2012 (DE) 10 2012 218 553

(51) **Int. Cl.**

F15B 1/02	(2006.01)
F16K 31/60	(2006.01)
F15B 1/027	(2006.01)
B60T 8/42	(2006.01)
F16K 15/18	(2006.01)
B60T 8/36	(2006.01)
F15B 1/22	(2006.01)
B60T 8/48	(2006.01)

(52) **U.S. Cl.**

CPC ***F16K 31/602*** (2013.01); ***B60T 8/368*** (2013.01); ***B60T 8/42*** (2013.01); ***F15B 1/027*** (2013.01); ***F15B 1/22*** (2013.01); ***F16K 15/183*** (2013.01); *B60T 8/4275* (2013.01); *B60T 8/4872* (2013.01); *F15B 2201/21* (2013.01); *F15B 2201/31* (2013.01); *F15B 2201/411* (2013.01)

(58) **Field of Classification Search**

CPC F15B 2201/21; F15B 2201/411; F15B 15/103; F16L 55/045; F16L 55/05; F16L 55/055; F16K 31/1221; F16K 15/183; B21D 53/10; B60T 8/368; F16J 3/06

USPC 137/522, 539; 251/239

See application file for complete search history.

(56) **References Cited**

U.S. PATENT DOCUMENTS

5,232,273	A *	8/1993	Eckstein et al.	303/116.4
5,333,945	A *	8/1994	Volz et al.	303/119.2
5,590,936	A *	1/1997	Reuter	303/116.1
5,672,053	A *	9/1997	Sabha	417/569
5,794,656	A *	8/1998	Breslin	137/533.11
7,913,503	B2 *	3/2011	Lu et al.	62/222
2008/0017255	A1 *	1/2008	Petersen	137/522
2008/0029165	A1 *	2/2008	Beck	137/539
2009/0014072	A1 *	1/2009	Zhang	137/522

(Continued)

FOREIGN PATENT DOCUMENTS

DE	10 2009 028 912 A1	3/2010
DE	10 2010 038 338 A1	9/2011
DE	10 2011 087 816 A1	6/2012

Primary Examiner — Nathaniel Wiehe
Assistant Examiner — Abiy Teka
(74) *Attorney, Agent, or Firm* — Maginot, Moore & Beck LLP

(57) **ABSTRACT**

A valve of an accumulator device, which is formed by an accumulator cylinder and an accumulator piston guided therein, includes a valve sealing body. The valve sealing body is configured to selectively open and close a valve opening at a valve seat. The valve also includes an opening mechanism configured to selectively raise the valve sealing body from the valve seat. The opening mechanism is held by a spring element, and the spring element is formed by a punched and bent part.
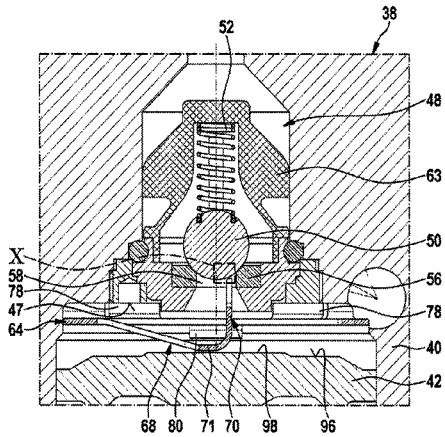
17 Claims, 10 Drawing Sheets