US009409640B2

(12) **United States Patent**
**Shimazaki**

(10) **Patent No.: US 9,409,640 B2**
(45) **Date of Patent: Aug. 9, 2016**

(54) **DECELERATING AND REVERSING DEVICE FOR MARINE VESSEL**

(71) Applicant: **YANMAR CO., LTD.**, Osaka (JP)

(72) Inventor: **Keisei Shimazaki**, Hyogo (JP)

(73) Assignee: **YANMAR CO., LTD.**, Osaka (JP)

( * ) Notice: Subject to any disclaimer, the term of this patent is extended or adjusted under 35 U.S.C. 154(b) by 78 days.

(21) Appl. No.: **14/365,823**

(22) PCT Filed: **Dec. 12, 2012**

(86) PCT No.: **PCT/JP2012/082180**
§ 371 (c)(1),
(2) Date: **Jun. 16, 2014**

(87) PCT Pub. No.: **WO2013/089133**
PCT Pub. Date: **Jun. 20, 2013**

(65) **Prior Publication Data**

US 2015/0068331 A1 Mar. 12, 2015

(30) **Foreign Application Priority Data**

Dec. 14, 2011 (JP) ..... 2011-273485

(51) **Int. Cl.**

| | |
|---|---|
| ***F16H 3/16*** | (2006.01) |
| ***B63J 3/02*** | (2006.01) |
| ***B63H 23/30*** | (2006.01) |
| ***B63H 23/08*** | (2006.01) |
| ***B63H 5/07*** | (2006.01) |

(Continued)

(52) **U.S. Cl.**
CPC ... ***B63J 3/02*** (2013.01); ***B63H 5/07*** (2013.01); ***B63H 23/08*** (2013.01); ***B63H 23/30*** (2013.01); *B63J 2003/005* (2013.01); *F16H 3/14* (2013.01)

(58) **Field of Classification Search**
CPC ..... F16H 3/14; B63J 3/02; B63H 23/08; B63H 23/30
USPC ..... 74/15.66
See application file for complete search history.

(56) **References Cited**

U.S. PATENT DOCUMENTS

4,451,238 A * 5/1984 Arnold ..... B63H 23/32 192/219
4,546,661 A * 10/1985 Weis ..... F16H 3/14 74/15.4

(Continued)

FOREIGN PATENT DOCUMENTS

| | | | |
|---|---|---|---|
| JP | 63-116995 | A | 5/1988 |
| JP | 2002-096796 | A | 4/2002 |
| JP | 2010-12832 | A | 1/2010 |

OTHER PUBLICATIONS

Misao et al., Speed-Reducing Reversing Gear for Ship, Apr. 2, 2002, JPO, JP 2002-096796 A, Machine Translation of Description.*

(Continued)

*Primary Examiner* — James English
(74) *Attorney, Agent, or Firm* — Cantor Colburn LLP

(57) **ABSTRACT**

A forward input gear, a backward input gear, a forward clutch, a backward clutch, and a PTO transmission unit for extracting motive power are contiguously arranged in the cover width direction in a case cover, and the PTO transmission unit is constituted by a PTO gear meshed with the forward input gear, and a PTO shaft on which the PTO gear is fixedly disposed in the middle of the shaft, and the PTO shaft is detachably and rotatably supported between a second case and the case cover.
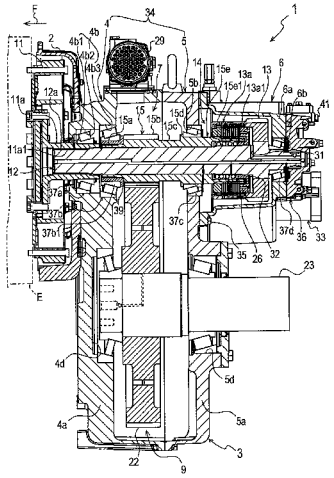
**3 Claims, 7 Drawing Sheets**