US009009640B1

(12) **United States Patent**
Atcitty et al.

(10) **Patent No.: US 9,009,640 B1**
(45) **Date of Patent: Apr. 14, 2015**

(54) **AUTOMATIC COMPUTATION OF TRANSFER FUNCTIONS**

(71) Applicant: **Sandia Corporation**, Albuquerque, NM (US)

(72) Inventors: **Stanley Atcitty**, Albuquerque, NM (US); **Luke Dale Watson**, Savannah, MO (US)

(73) Assignee: **Sandia Corporation**, Albuquerque, NM (US)

(*) Notice: Subject to any disclaimer, the term of this patent is extended or adjusted under 35 U.S.C. 154(b) by 0 days.

(21) Appl. No.: **13/921,110**

(22) Filed: **Jun. 18, 2013**

(51) **Int. Cl.**
G06F 17/50 (2006.01)

(52) **U.S. Cl.**
CPC ***G06F 17/5009*** (2013.01); ***G06F 17/5072*** (2013.01)

(58) **Field of Classification Search**
USPC 716/100, 106, 113
See application file for complete search history.

(56) **References Cited**

U.S. PATENT DOCUMENTS

3,973,112	A	8/1976	Sloane	
5,404,319	A *	4/1995	Smith et al.	716/103
5,444,358	A *	8/1995	Delepaut	323/222
5,689,685	A *	11/1997	Feldmann et al.	703/2
6,498,498	B1 *	12/2002	Menezes et al.	324/613
7,373,289	B2 *	5/2008	McGaughy et al.	703/14
7,454,300	B2 *	11/2008	Suaya et al.	702/65
7,552,159	B2	6/2009	Gay-Bellile et al.	
8,185,853	B2 *	5/2012	Kim et al.	716/107
8,219,374	B1 *	7/2012	Batarseh et al.	703/13
2005/0154315	A1	7/2005	Nair et al.	
2005/0186915	A1 *	8/2005	Williams	455/67.11
2008/0288201	A1	11/2008	Oettinger et al.	

OTHER PUBLICATIONS

Wasynczok, et al; "Automated State Model Generation Algorithm for Power Circuits and Systems," IEEE Transactions on Power Systems, vol. 11, No. 4, Nov. 1996, pp. 1951-1956.

* cited by examiner

Primary Examiner — Sun Lin
(74) *Attorney, Agent, or Firm* — Daniel J. Jenkins

(57) **ABSTRACT**

Technologies pertaining to the automatic computation of transfer functions for a physical system are described herein. The physical system is one of an electrical system, a mechanical system, an electromechanical system, an electrochemical system, or an electromagnetic system. A netlist in the form of a matrix comprises data that is indicative of elements in the physical system, values for the elements in the physical system, and structure of the physical system. Transfer functions for the physical system are computed based upon the netlist.
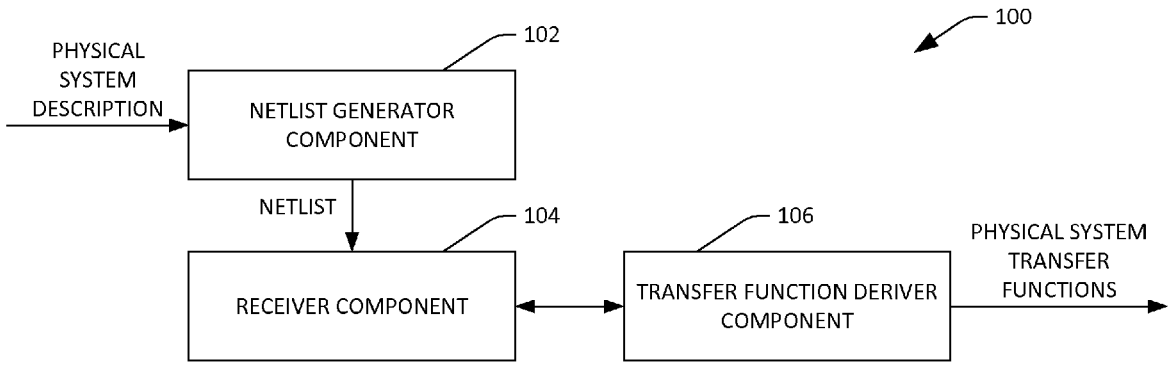
20 Claims, 13 Drawing Sheets