US009408740B2

(12) **United States Patent**
Jacobson

(10) **Patent No.: US 9,408,740 B2**
(45) **Date of Patent: Aug. 9, 2016**

(54) **NECK PAIN RELIEVING DEVICES**

(71) Applicant: **Mayo Foundation for Medical Education and Research**, Rochester, MN (US)

(72) Inventor: **Mark A. Jacobson**, Grand Meadow, MN (US)

(73) Assignee: **Mayo Foundation for Medical Education and Research**, Rochester, MN (US)

(*) Notice: Subject to any disclaimer, the term of this patent is extended or adjusted under 35 U.S.C. 154(b) by 292 days.

(21) Appl. No.: **13/953,957**

(22) Filed: **Jul. 30, 2013**

(65) **Prior Publication Data**

US 2014/0026894 A1 Jan. 30, 2014

Related U.S. Application Data

(60) Provisional application No. 61/677,345, filed on Jul. 30, 2012.

(51) **Int. Cl.**

A61G 15/00	(2006.01)
A61F 5/37	(2006.01)
A61F 5/01	(2006.01)

(52) **U.S. Cl.**

CPC ***A61F 5/3707*** (2013.01); ***A61F 5/01*** (2013.01)

(58) **Field of Classification Search**

CPC ... G10L 17/26; A45B 1/04; A45F 2200/0566; A61F 5/01; A61F 5/3707; A61F 5/055; A61F 5/024; A61F 2250/0004; A61F 2250/0065; H04M 1/271; H04M 1/72561; H04M 2201/40; H04M 2201/54; H04M 2201/60; H04M 2203/2061; H04M 3/382; H04M 3/493; H04M 3/53; A47C 7/383; Y10S 128/23; A63B 21/05; A63B 2208/12; A63B 23/025; A63B 23/03; A63B 2022/206; A63B 21/0085; A63B 21/02; A63B 21/068; A63B 2208/0219; A63B 22/205; A63B 23/0211; A63B 23/0216; A63B 21/0611; A63B 2225/093; A63B 21/06; A63B 21/0615; A63B 2210/50; B60N 2/005; B60N 2/01; B60N 2/265

USPC 602/17–19; 128/857, 870

See application file for complete search history.

(56) **References Cited**

U.S. PATENT DOCUMENTS

5,495,867	A *	3/1996	Block	135/65
8,684,957	B2 *	4/2014	Bonutti	602/19

* cited by examiner

Primary Examiner — Michael Brown

(74) *Attorney, Agent, or Firm* — Fish & Richardson P.C.

(57) **ABSTRACT**

This document provides methods and materials related to relieving neck pain. For example, neck pain relieving devices as well as methods for making and using neck pain relieving devices to provide relief from chronic or acute neck pain by providing support to the back of the head are provided.
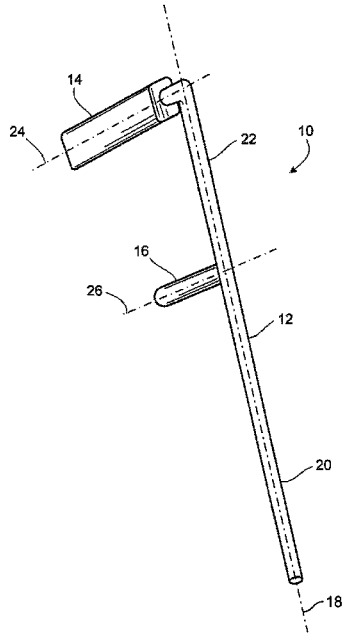
20 Claims, 5 Drawing Sheets