US008295039B2

(12) **United States Patent**
**Cheng et al.**

(10) **Patent No.: US 8,295,039 B2**
(45) **Date of Patent: Oct. 23, 2012**

(54) **ELECTRONIC DEVICE**

(75) Inventors: **Yung-Fa Cheng**, Taipei Hsien (TW); **Kuo-Hsiang Wu**, Taipei Hsien (TW)

(73) Assignee: **Hon Hai Precision Industry Co., Ltd.**, Tu-Cheng, New Taipei (TW)

( * ) Notice: Subject to any disclaimer, the term of this patent is extended or adjusted under 35 U.S.C. 154(b) by 299 days.

(21) Appl. No.: **12/788,334**

(22) Filed: **May 27, 2010**

(65) **Prior Publication Data**

US 2011/0122556 A1 May 26, 2011

(30) **Foreign Application Priority Data**

Nov. 24, 2009 (CN) ..... 2009 1 0310303

(51) **Int. Cl.**
***G06F 1/16*** (2006.01)
***H05K 5/00*** (2006.01)
***H05K 7/00*** (2006.01)

(52) **U.S. Cl.** ..... **361/679.26**; 361/679.45; 361/679.55

(58) **Field of Classification Search** .. 361/679.4–679.45, 361/679.55
See application file for complete search history.

(56) **References Cited**

U.S. PATENT DOCUMENTS

5,255,214 A * 10/1993 Ma ..... 361/679.06
5,293,300 A * 3/1994 Leung ..... 361/679.59
5,460,547 A * 10/1995 Belt et al. ..... 439/638
5,583,744 A * 12/1996 Oguchi et al. ..... 361/679.58
5,594,617 A * 1/1997 Foster et al. ..... 361/679.02
5,642,258 A * 6/1997 Barrus et al. ..... 361/679.59
5,677,827 A * 10/1997 Yoshioka et al. ..... 361/679.58
5,721,668 A * 2/1998 Barrus et al. ..... 361/679.59
5,729,478 A * 3/1998 Ma et al. ..... 361/679.41
5,808,862 A * 9/1998 Robbins ..... 361/679.09
5,901,035 A * 5/1999 Foster et al. ..... 361/679.55
6,002,583 A * 12/1999 Shoji et al. ..... 361/679.55
6,078,496 A * 6/2000 Oguchi et al. ..... 361/679.55
6,128,184 A * 10/2000 Ito et al. ..... 361/679.27
6,191,941 B1 * 2/2001 Ito et al. ..... 361/679.27
6,233,141 B1 * 5/2001 Lee et al. ..... 361/679.57
6,307,740 B1 * 10/2001 Foster et al. ..... 361/679.1
6,385,039 B1 * 5/2002 Chiang et al. ..... 361/679.09
6,385,041 B1 * 5/2002 Choi ..... 361/679.41
6,411,503 B1 * 6/2002 Kambayashi et al. ... 361/679.41
6,452,795 B1 * 9/2002 Lee ..... 361/679.41
6,456,488 B1 * 9/2002 Foster et al. ..... 361/679.1
6,492,974 B1 * 12/2002 Nobuchi et al. ..... 345/156
6,535,378 B1 * 3/2003 Oguchi et al. ..... 361/679.55
6,612,668 B2 * 9/2003 Doan ..... 312/223.2
6,744,623 B2 * 6/2004 Numano et al. ..... 361/679.27
6,768,637 B1 * 7/2004 Amemiya ..... 361/679.55
6,792,480 B2 * 9/2004 Chaiken et al. ..... 710/14
6,795,305 B2 * 9/2004 Tanaka et al. ..... 361/679.27
6,819,961 B2 * 11/2004 Jacobs et al. ..... 700/17
6,831,229 B1 * 12/2004 Maatta et al. ..... 174/66
6,894,893 B2 * 5/2005 Hidesawa ..... 361/679.55
6,930,881 B2 * 8/2005 Karidis et al. ..... 361/679.55
6,956,734 B2 * 10/2005 Shin et al. ..... 361/679.55
6,975,890 B2 * 12/2005 Wu et al. ..... 455/575.1

(Continued)

*Primary Examiner* — Adrian S Wilson
(74) *Attorney, Agent, or Firm* — Altis Law Group, Inc.

(57) **ABSTRACT**

An electronic device includes a main body, and a connecting component. The connecting component comprises at least one interface. The connecting component is capable of rotating with respect to the main body to switch between a first state in which the at least one interface is hidden under the main body and a second state in which the at least one interface exposes out of the main body.
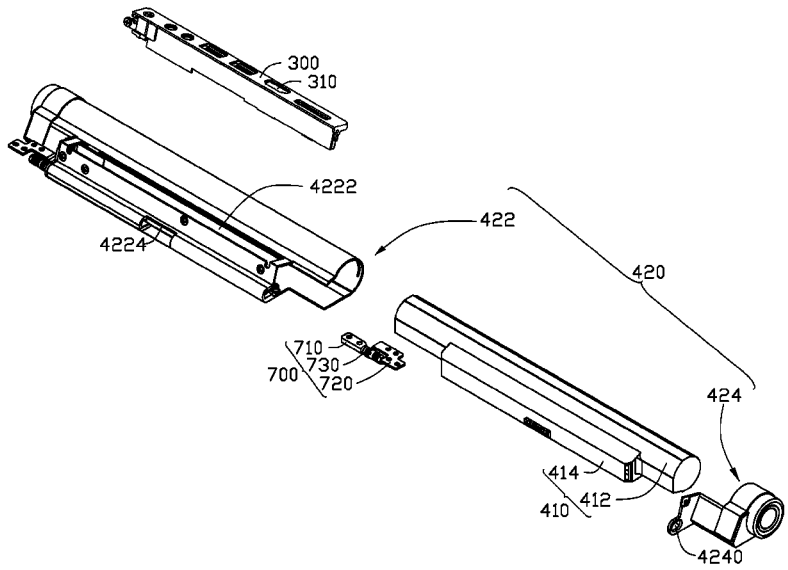
**14 Claims, 4 Drawing Sheets**