DATA ENCODING KEYBOARD

Filed April 29, 1963 2 Sheets-Sheet 1

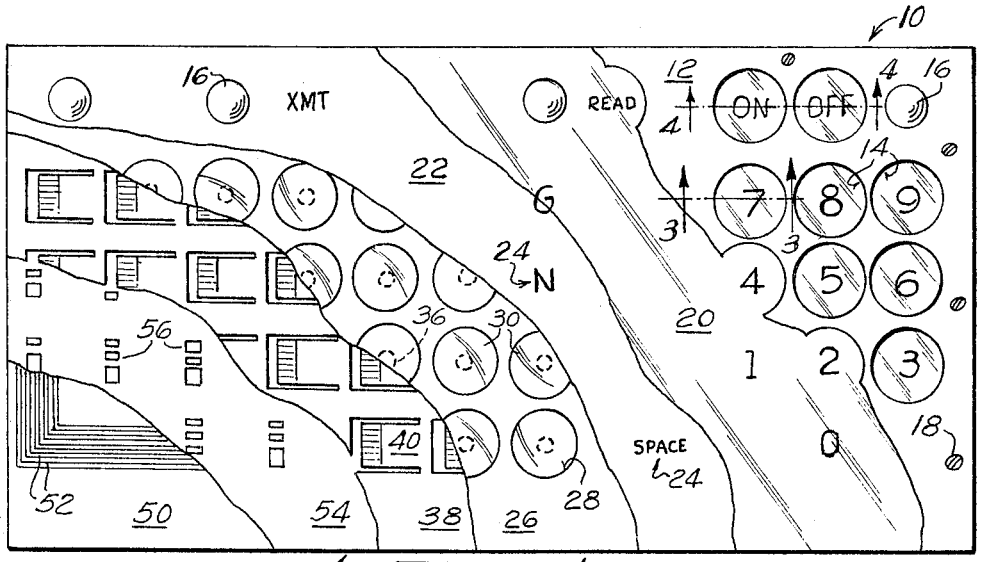

Fig. 1

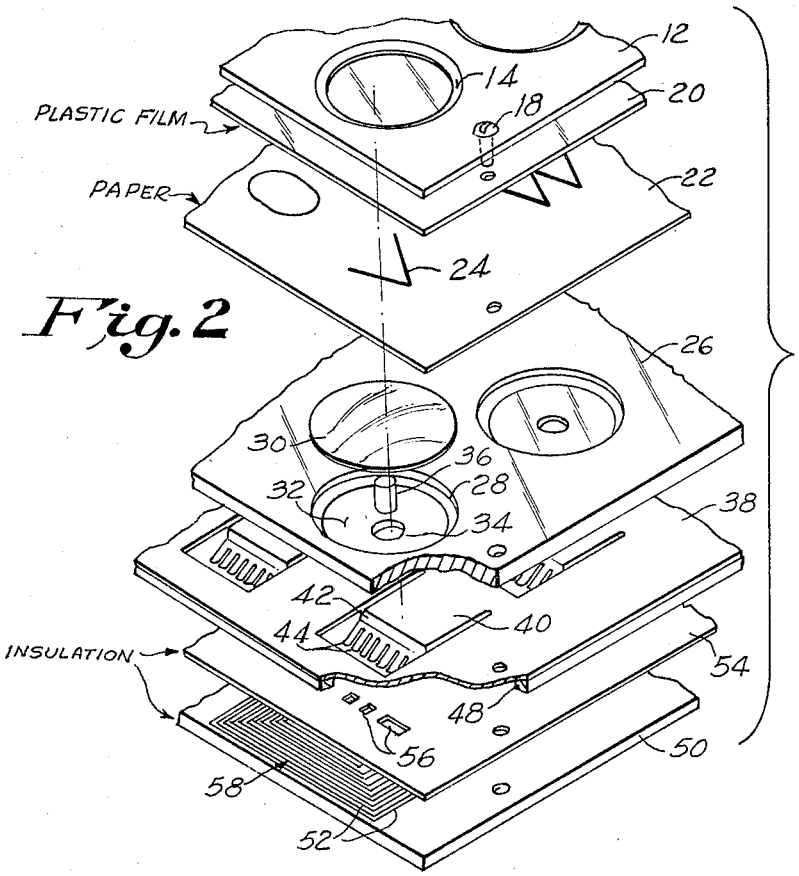

Fig. 2