April 6, 1971 I. N. FEHR ET AL 3,574,039

FILM SEALING AND CUTTING APPARATUS

Filed Nov. 2, 1967

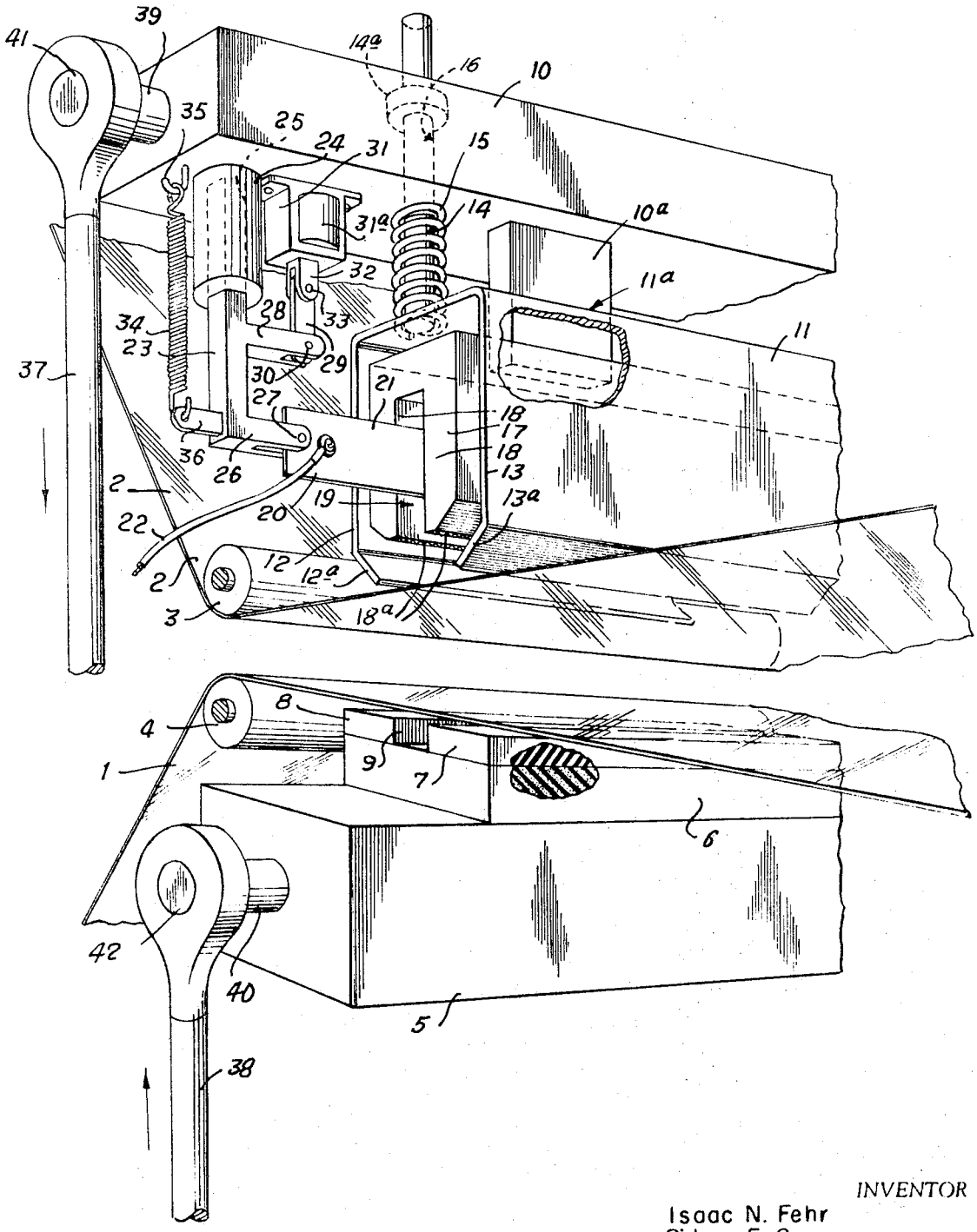

INVENTOR

Isaac N. Fehr
Sidney E. Cannon
W. DeWitt Goodman
Maurice Blais

BY Howard E. Moore

ATTORNEY