Dec. 11, 1962 C. N. CROSS 3,068,139

METHOD OF ASSEMBLING AND JOINING A PLURALITY OF PANEL MEMBERS BY MEANS OF DECORATIVE BINDING MATERIAL

Filed Feb. 25, 1958 3 Sheets-Sheet 1

Fig. 1.

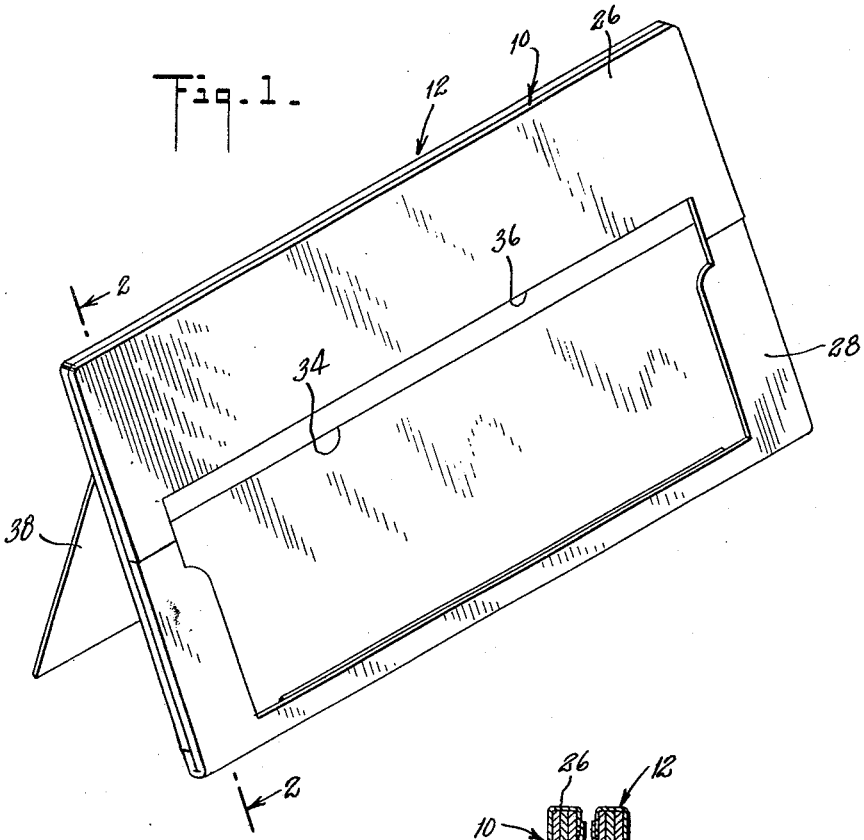

Fig. 2.

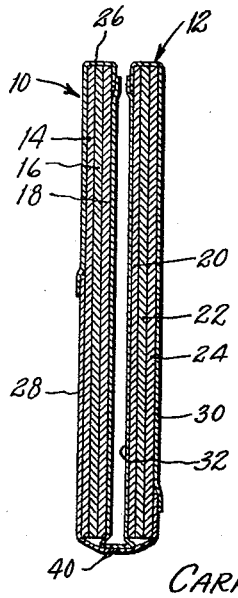

INVENTOR.
CARROLL N. CROSS
BY P. E. Henninger
ATTORNEY