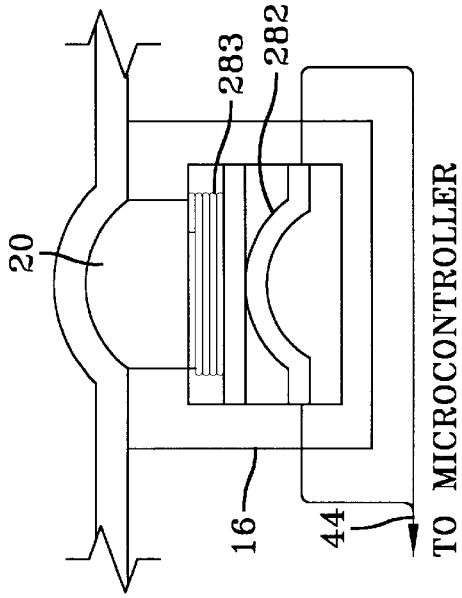

FIG-9B

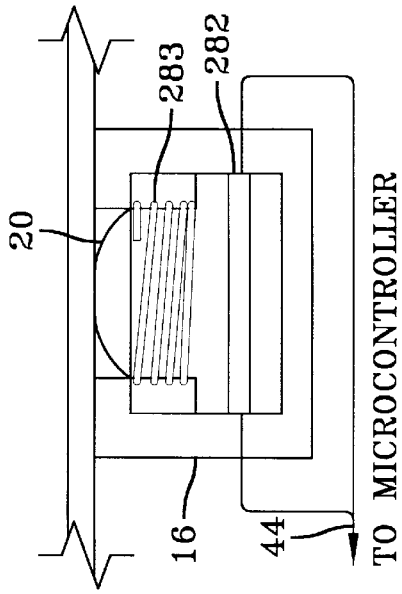

FIG-9A

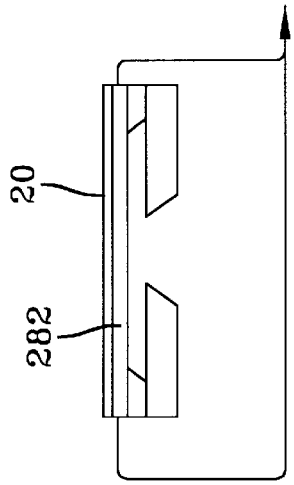

FIG-10B

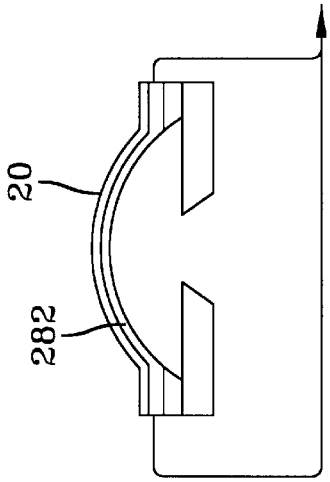

FIG-10A