US008547339B2

(12) **United States Patent**
Ciesla

(10) **Patent No.: US 8,547,339 B2**
(45) **Date of Patent: Oct. 1, 2013**

(54) **SYSTEM AND METHODS FOR RAISED TOUCH SCREENS**

(75) Inventor: **Craig M. Ciesla**, Mountain View, CA (US)

(73) Assignee: **Tactus Technology, Inc.**, Fremont, CA (US)

(*) Notice: Subject to any disclaimer, the term of this patent is extended or adjusted under 35 U.S.C. 154(b) by 1082 days.

(21) Appl. No.: **11/969,848**

(22) Filed: **Jan. 4, 2008**

(65) **Prior Publication Data**

US 2009/0174673 A1 Jul. 9, 2009

(51) **Int. Cl.**
G06F 3/041 (2006.01)
G09G 5/00 (2006.01)

(52) **U.S. Cl.**
USPC **345/173**; 345/156

(58) **Field of Classification Search**
USPC 345/156–184, 104; 463/37–38; 455/466; 178/18.01–20.04; 434/112–117; 340/407.1–407.2
See application file for complete search history.

(56) **References Cited**

U.S. PATENT DOCUMENTS

3,034,628	A	5/1962	Wadey	
3,659,354	A *	5/1972	Sutherland	434/113
3,759,108	A	9/1973	Borom et al.	
3,780,236	A	12/1973	Gross	
3,818,487	A *	6/1974	Brody et al.	340/407.1
4,109,118	A	8/1978	Kley	
4,209,819	A	6/1980	Seignemartin	
4,290,343	A	9/1981	Gram	
4,307,268	A	12/1981	Harper	
4,467,321	A *	8/1984	Volnak	341/23
4,477,700	A	10/1984	Balash et al.	
4,517,421	A	5/1985	Margolin	
4,543,000	A	9/1985	Hasenbalg	
4,700,025	A	10/1987	Hatayama et al.	
4,920,343	A *	4/1990	Schwartz	341/33
5,194,852	A	3/1993	More et al.	

(Continued)

FOREIGN PATENT DOCUMENTS

JP	10255106	9/1998
JP	2006268068 A	10/2006

(Continued)

OTHER PUBLICATIONS

Jeong, Ki-Hun, et al., "Tunable Microdoublet Lens Array", Optical Society of America, Optics Express; vol. 12, No. 11. May 31, 2004, 7 pages.

(Continued)

Primary Examiner — Vijay Shankar
Assistant Examiner — Patrick F Marinelli
(74) *Attorney, Agent, or Firm* — Jeffrey Schox

(57) **ABSTRACT**

A touch sensitive display assembly includes a touch screen and a button array. The touch screen is configured to display one or more input keys. The button array includes one or more buttons corresponding to the one or more input keys. The button array is formed by a substrate attached to a button membrane thereby creating a set of button cavities corresponding to the input keys. The button cavities are configured to be inflated and deflated by a pump coupled to a fluid reservoir. The cavities can be inflated/deflated together, in subsets, and/or individually. In some embodiments, the button array is sandwiched between a touch sensing layer and a display of the touch screen. In other embodiments, the button array can be located either above or below the touch screen.
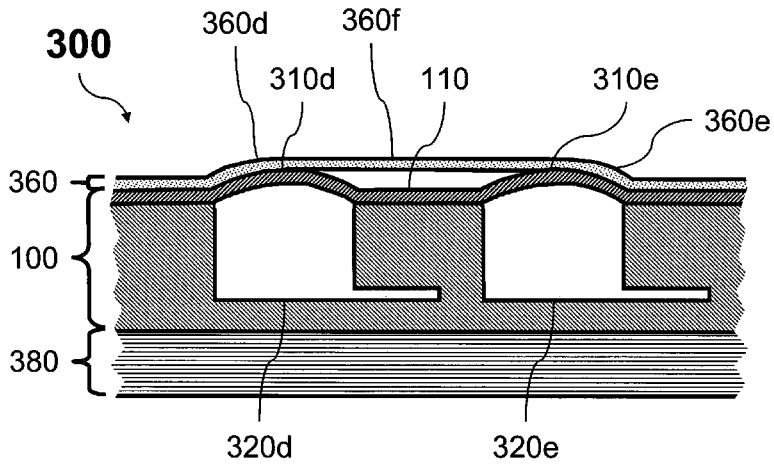
23 Claims, 10 Drawing Sheets