FIG. 1
RELATED ART

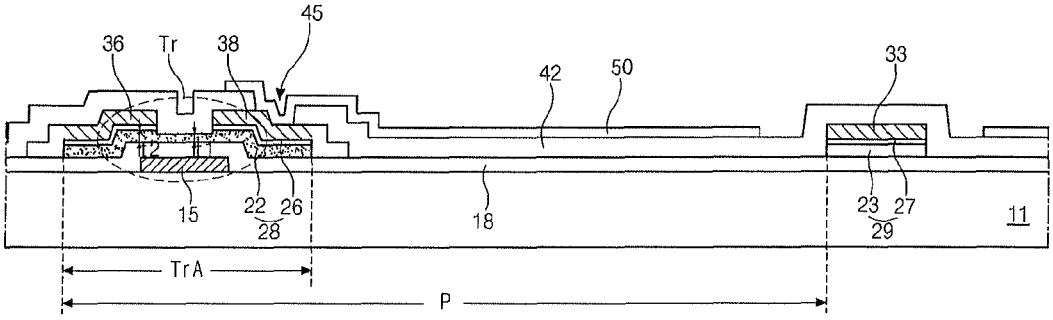
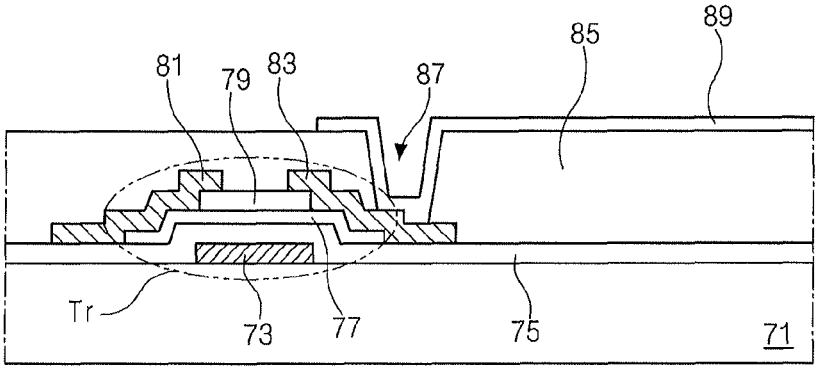
FIG. 2
RELATED ART