June 26, 1962 P. J. SPERZEL 3,040,339

PRE-SET SUSTAINING HINGE FOR TOILET SEATS

Filed March 7, 1960

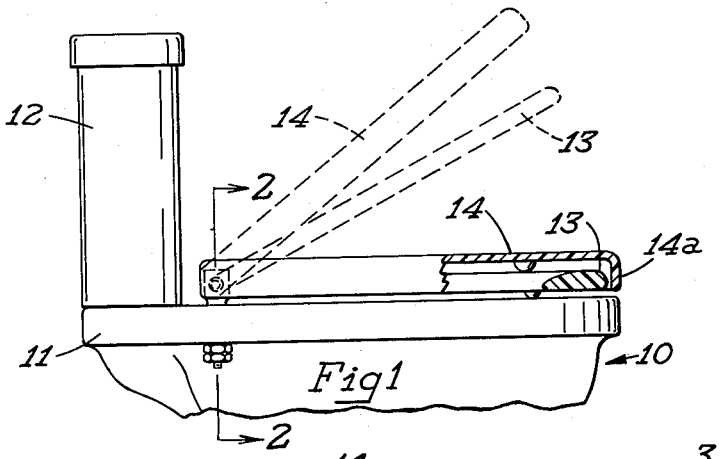

Fig 1

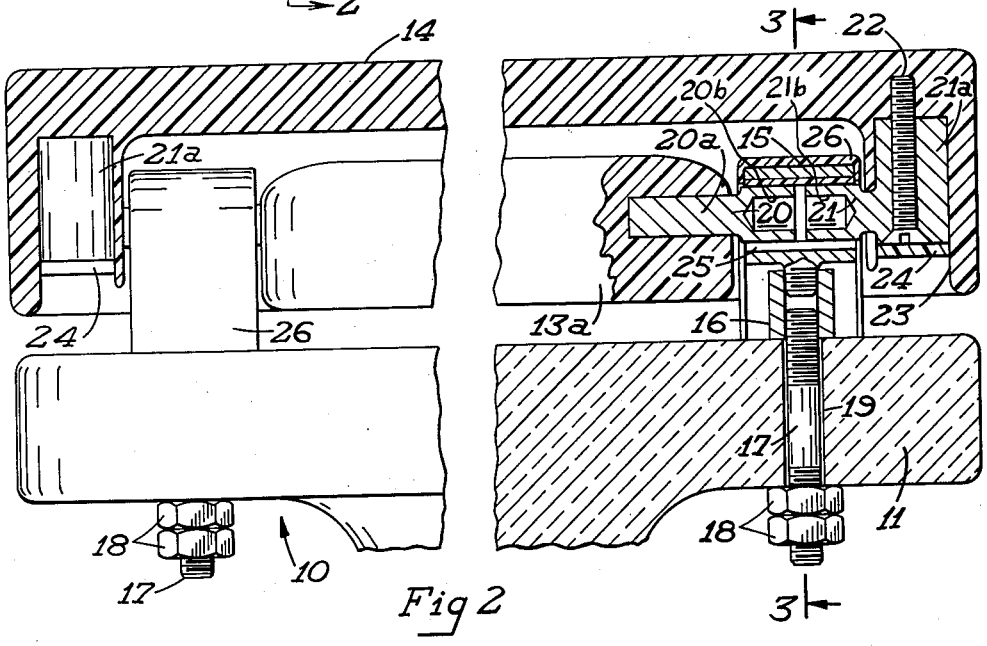

Fig 2

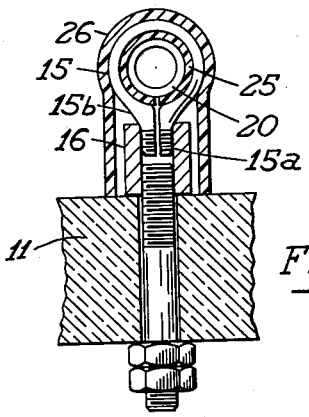

Fig 3

INVENTOR.
PETER J. SPERZEL
BY
Williamson, Schroeder, & Palmatier
ATTORNEYS