US009638439B2

(12) **United States Patent**
Shaffer et al.

(10) **Patent No.: US 9,638,439 B2**
(45) **Date of Patent: May 2, 2017**

(54) **WATER HEATER APPLIANCE**

(71) Applicant: **General Electric Company**, Schenectady, NY (US)

(72) Inventors: **Timothy Scott Shaffer**, La Grange, KY (US); **Shaun Michael Ward**, Louisville, KY (US); **Dan Riley**, The Villages, FL (US)

(73) Assignee: **Haier US Appliance Solutions, Inc.**, Wilmington, DE (US)

(*) Notice: Subject to any disclaimer, the term of this patent is extended or adjusted under 35 U.S.C. 154(b) by 72 days.

(21) Appl. No.: **14/596,276**

(22) Filed: **Jan. 14, 2015**

(65) **Prior Publication Data**

US 2016/0201946 A1 Jul. 14, 2016

(51) **Int. Cl.**

F24H 9/12	(2006.01)
F24H 9/14	(2006.01)
F24H 9/20	(2006.01)
G05D 23/185	(2006.01)

(52) **U.S. Cl.**

CPC ***F24H 9/124*** (2013.01); ***F24H 9/142*** (2013.01); ***F24H 9/2007*** (2013.01); ***G05D 23/1858*** (2013.01)

(58) **Field of Classification Search**

CPC F24H 9/124; F24H 9/2007; F24H 9/142; G05D 23/1858; F16K 31/002

See application file for complete search history.

(56) **References Cited**

U.S. PATENT DOCUMENTS

2,807,421	A *	9/1957	Carlson, Jr.	F16T 1/10 126/343.5 A
3,071,341	A *	1/1963	Wantz	F23N 5/067 236/99 R
3,191,863	A *	6/1965	King et al.	G05D 23/127 236/99 R
4,585,208	A *	4/1986	Andresen	F16K 1/52 137/637.2
5,159,658	A *	10/1992	Tuttle	F24H 9/2021 122/14.22
5,205,483	A *	4/1993	Kostorz	G05D 23/1346 236/12.2
5,230,465	A *	7/1993	Kostorz	G05D 23/1346 236/12.1
6,929,188	B2 *	8/2005	Taylor	G05D 23/1313 236/12.12
2005/0047612	A1 *	3/2005	Shimada	G05G 1/087 381/104
2009/0078218	A1 *	3/2009	Gordon	F24D 19/1051 122/13.3

(Continued)

FOREIGN PATENT DOCUMENTS

CN	1731056	*	8/2005
CN	201818834 U		5/2011

Primary Examiner — Steven B McAllister
Assistant Examiner — Steven Anderson, II
(74) *Attorney, Agent, or Firm* — Dority & Manning, P.A.

(57) **ABSTRACT**

A water heater appliance with a mixing valve positioned within a casing of the water heater appliance is provided. The mixing valve is fluidly coupled to a heated water conduit and a bypass conduit of the water heater appliance. An actuator assembly is configured for selectively adjusting a mixing ratio of the mixing valve. The actuator assembly includes a knob positioned at an outer surface of the casing.
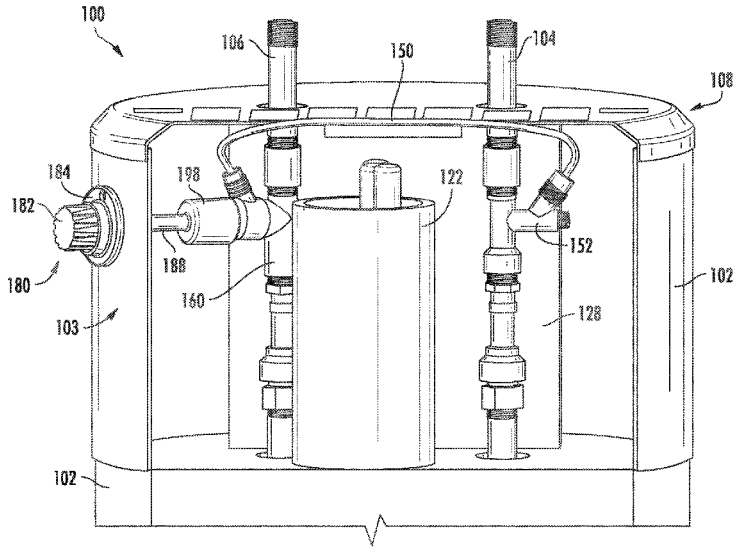
10 Claims, 6 Drawing Sheets