US009636539B1

(12) **United States Patent**
Brumit

(10) **Patent No.: US 9,636,539 B1**
(45) **Date of Patent: May 2, 2017**

(54) **REHABILITATION MACHINE AND APPARATUS**

(71) Applicant: **Kent Brumit**, Pulaski, TN (US)

(72) Inventor: **Kent Brumit**, Pulaski, TN (US)

(*) Notice: Subject to any disclaimer, the term of this patent is extended or adjusted under 35 U.S.C. 154(b) by 0 days.

(21) Appl. No.: **15/396,556**

(22) Filed: **Dec. 31, 2016**

Related U.S. Application Data

(63) Continuation-in-part of application No. 14/725,717, filed on May 29, 2015.

(51) **Int. Cl.**

A63B 22/12	(2006.01)
A63B 22/00	(2006.01)
A63B 71/00	(2006.01)
A63B 21/22	(2006.01)
A63B 21/00	(2006.01)
A63B 22/06	(2006.01)
A63B 23/035	(2006.01)
A63B 24/00	(2006.01)

(52) **U.S. Cl.**
CPC ***A63B 22/0002*** (2013.01); ***A63B 21/22*** (2013.01); ***A63B 21/4034*** (2015.10); ***A63B 21/4035*** (2015.10); ***A63B 22/001*** (2013.01); ***A63B 22/0046*** (2013.01); ***A63B 22/0605*** (2013.01); ***A63B 23/03516*** (2013.01); ***A63B 24/0087*** (2013.01)

(58) **Field of Classification Search**
CPC A63B 22/00; A63B 22/06; A63B 22/0002; A63B 22/001; A63B 22/0012; A63B 2022/06; A63B 69/16; A63B 23/035; A63B 22/0605; A63B 2022/0652; A61H 1/0266; A61H 1/0285
USPC 482/51, 57–65
See application file for complete search history.

(56) **References Cited**

U.S. PATENT DOCUMENTS

3,572,699 A *	3/1971	Nies	A61B 5/221	482/5
D255,348 S *	6/1980	Ott	D13/115	
4,402,502 A *	9/1983	Peters	A61H 1/0214	482/139
4,436,097 A *	3/1984	Cunningham	A61B 5/221	482/62
4,529,195 A *	7/1985	Stevens	A63B 5/20	482/1
4,572,501 A *	2/1986	Durham	A63B 22/001	280/250.1
4,846,156 A *	7/1989	Kopnicky	A61H 1/0214	482/62

(Continued)

Primary Examiner — Stephen Crow
Assistant Examiner — Garrett Atkinson
(74) *Attorney, Agent, or Firm* — Wayne Edward Ramage; Baker Donelson

(57) **ABSTRACT**

An apparatus for providing therapeutic rehabilitation exercise to bedridden individuals and patients, including comatose individuals. A vertical support column extends upwards from a base, with one or more arms extend from the vertical support column, each providing a rotary mechanism at the distal end, with pedals or handles attached thereto. The individual's feet or hands are secured to the pedals or handles, respectively. Straps, brackets, or other fastening means may be used to secure the feet and hands. An electric motor causes the rotary mechanism to move the pedals or handles in a rotary fashion, thereby providing movement and exercise for the individual's legs and arms.
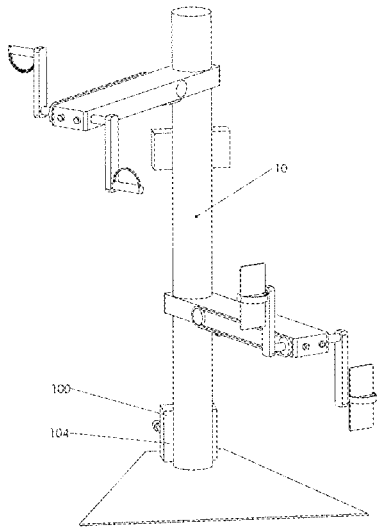
14 Claims, 19 Drawing Sheets