US005831439A

United States Patent [19]

Suenram et al.

[11] **Patent Number: 5,831,439**

[45] **Date of Patent: Nov. 3, 1998**

[54] **PORTABLE FOURIER TRANSFORM MICROWAVE SPECTROMETER WITH CRYOGENIC RECEIVER FOR TRACE GAS ANALYSIS**

[75] Inventors: **Richard D. Suenram**, Germantown; **Francis J. Lovas**, Bethesda, both of Md.; **Jens U. Grabow**, Kiel, Germany; **Marlin D. Harmony**, Lawrence, Kans.; **Igor Leonov**; **Andre Zuban**, both of Nizhny Novgorod, Russian Federation

[73] Assignee: **The United States of America as respresented by the Secretary of Commerce**, Washington, D.C.

[21] Appl. No.: **802,517**

[22] Filed: **Feb. 20, 1997**

Related U.S. Application Data

[60] Provisional application No. 60/013,064 Mar. 8, 1996.

[51] **Int. Cl.**[6] **G01N 22/00**

[52] **U.S. Cl.** **324/636**; 324/633

[58] **Field of Search** 324/629, 633, 324/636, 307, 318; 359/838, 843, 846, 868, 869; 356/346; 427/162, 163.4, 165

[56] **References Cited**

U.S. PATENT DOCUMENTS

4,369,404	1/1983	Flygare et al.	324/636
4,703,273	10/1987	Kolbe et al.	324/636
5,057,782	10/1991	Brown et al.	324/636
5,124,653	6/1992	Andresen et al.	324/636

OTHER PUBLICATIONS

M.D. Harmony, K.A. Beran, D.M. Angst, and K.L. Ratzlaff, "A Compact Hot–Nozzle Fourier Transform Microwave Spectrometer", Rev. Sci. Instru., Aug. 1995, pp. 5196–5202.

J. U–Grabow and W. Stahl, Z. Naturforsch, "A Pulsed Molecular Beam Fourier Transform Spectrometer with Parallel Molecular Beam and Resonator Axes",. 45a, 1043–1044, May 1990.

J. Z. Gillies et al., "Van der Waals Complexes in 1,3–Dipolar Cycloaddition Reactions: Ozone–Ethylene," American Chemical Society 1991, 113, pp. 2413–2421 (month unavailable).

J. Z. Gillies et al., "van der Waals Complexes of Chemically Reactive Gases: Ozone–Acetylene," American Chemical Society 1991, 113 pp. 6409–6415 (month unavailable).

R. D. Suenram et al., Fourier Transform Microwave Spectroscopy: A Potential New Analytifal Tool for Trace Gas Species, in Proceedings of the 1994 U.S. EPA/WMA International Symposium, "Measurement of Toxic and Related Air Pollutants" pp. 551–561 (month unavailable).

F. J. Lovas et al., "Using Fourier Transform Microwave Spectroscopy to Detect Hazardous Air Pollutants," in Proceedings of Optical Sensing for Environmental and Process Monitoring, Orman A. Simpson, Editor, A&WMA vol. VIP–37 (SPIE vol. 2365) pp. 58–69, Apr. 1995.

Primary Examiner—Diep N. Do
Attorney, Agent, or Firm—Larson & Taylor

[57] **ABSTRACT**

A highly compact, portable, pulsed-molecular-beam Fabry-Perot cavity Fourier transform microwave spectrometer which incorporates ultra-fine Fabry-Perot mirror surface finishes has been developed for trace gas analysis. The mirrors, having a surface finish of less than or equal to 0.25 microns rms, are coated with nickel and then with either gold or silver. In a further embodiment, one or more fixed-tuned Fabry-Perot cavities are incorporated within a single vacuum chamber to monitor one or more chemical species of interest.
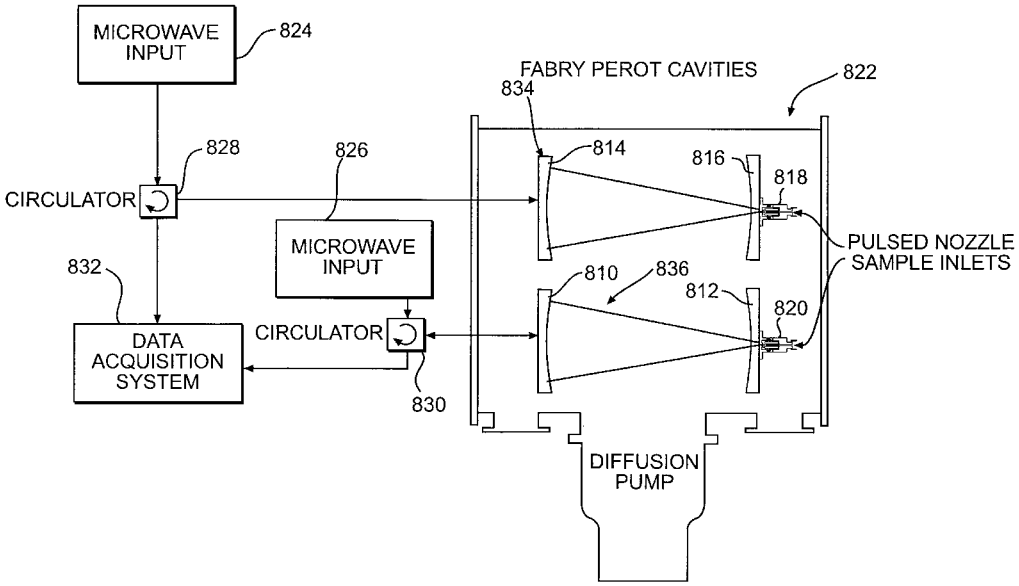
10 Claims, 9 Drawing Sheets