US008826539B2

(12) **United States Patent**
Dolan et al.

(10) **Patent No.: US 8,826,539 B2**
(45) **Date of Patent: Sep. 9, 2014**

(54) **METHOD FOR FLEX CIRCUIT BONDING WITHOUT SOLDER MASK FOR HIGH DENSITY ELECTRICAL INTERCONNECT**

(75) Inventors: **Bryan R. Dolan**, Rochester, NY (US); **Peter J. Nystrom**, Webster, NY (US)

(73) Assignee: **Xerox Corporation**, Norwalk, CT (US)

(*) Notice: Subject to any disclaimer, the term of this patent is extended or adjusted under 35 U.S.C. 154(b) by 0 days.

(21) Appl. No.: **13/472,734**

(22) Filed: **May 16, 2012**

(65) **Prior Publication Data**

US 2013/0307903 A1 Nov. 21, 2013

(51) **Int. Cl.**

B21D 53/76	(2006.01)
B23P 17/00	(2006.01)
B41J 2/135	(2006.01)

(52) **U.S. Cl.**

USPC **29/890.1**; 347/44; 347/45

(58) **Field of Classification Search**

CPC B41J 2/1603; B41J 2/1626; B41J 2/1631; B41J 2/1623

USPC 29/890.1; 347/44, 45

See application file for complete search history.

(56) **References Cited**

U.S. PATENT DOCUMENTS

8,071,413	B2 *	12/2011	Wang	438/50
8,360,557	B2 *	1/2013	Andrews et al.	347/68
2004/0253755	A1 *	12/2004	Chen et al.	438/21
2009/0113710	A1 *	5/2009	Lin et al.	29/890.1
2010/0295901	A1 *	11/2010	Stephens et al.	347/54
2011/0148993	A1 *	6/2011	Andrews et al.	347/71
2011/0298871	A1 *	12/2011	Stephens et al.	347/50
2012/0200631	A1 *	8/2012	Paschkewitz	347/18
2012/0222307	A1 *	9/2012	Stephens et al.	29/890.1
2012/0242756	A1 *	9/2012	Nystrom et al.	347/70
2012/0242758	A1 *	9/2012	Cellura et al.	347/71
2012/0274706	A1 *	11/2012	Dolan et al.	347/47

* cited by examiner

Primary Examiner — David Angwin

(74) *Attorney, Agent, or Firm* — MH2 Technology Law Group LLP

(57) **ABSTRACT**

In some aspects of the present application, a method of manufacturing a print head is disclosed. The method can include providing a jet stack including an array of jets, bonding an actuator layer to the jet stack, the actuator layer including an actuator array, applying a standoff adhesive layer to the actuator layer and the jet stack, the standoff layer having an array of holes, wherein each hole of the array of holes overlies one of the actuators of the actuator array. A flex circuit layer having an array of bumped contact pads is aligned such that each bumped contact pad aligns with one of the holes of the standoff adhesive. Further, the flex circuit layer is boned to the jet stack layer.
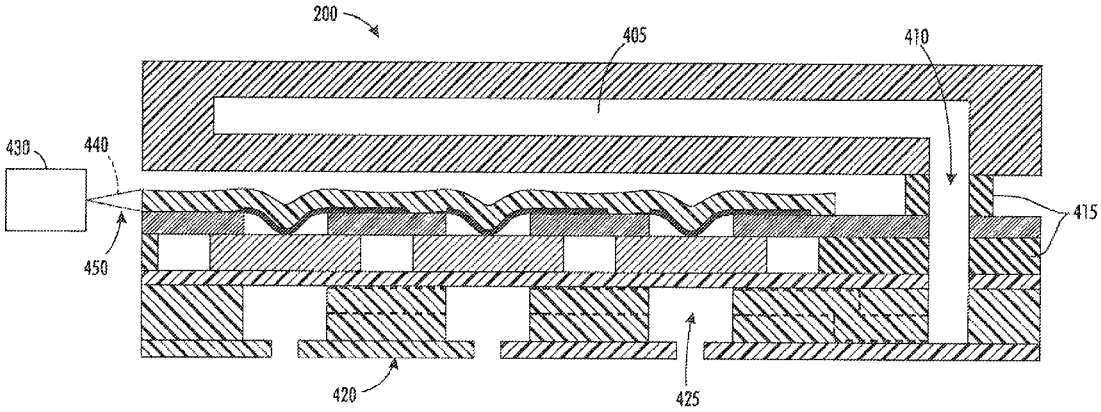
9 Claims, 4 Drawing Sheets