Feb. 18, 1964 C. D. BAUER ETAL 3,121,639

SPRAY DRYING PROCESS

Filed Oct. 19, 1960

FIG. 1.

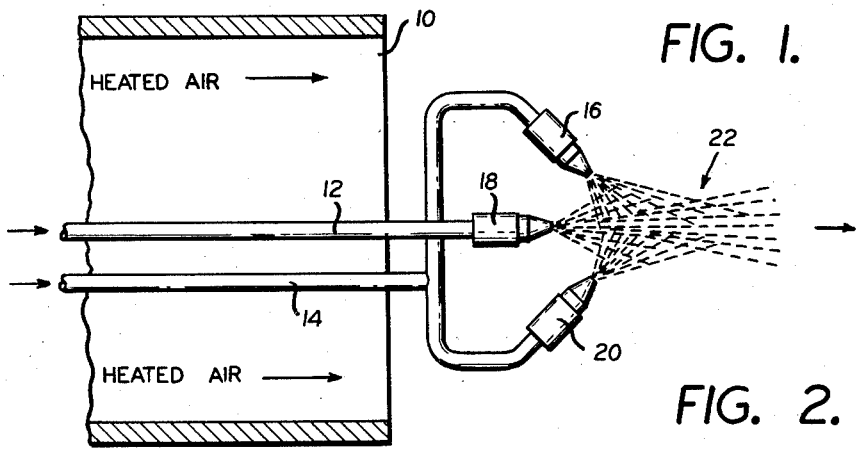

FIG. 2.

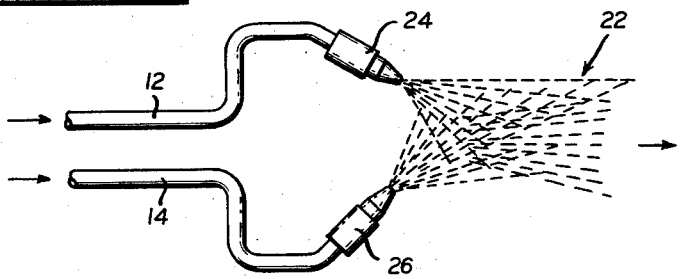

FIG. 3.

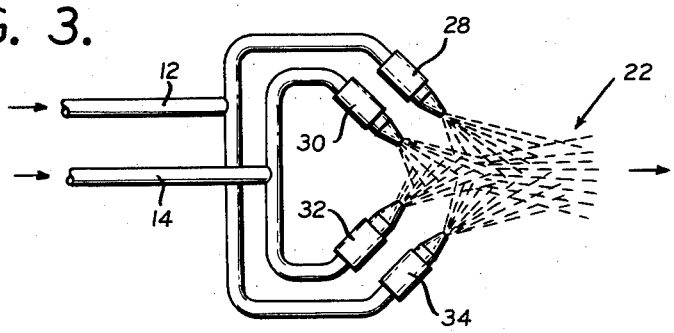

FIG. 4.

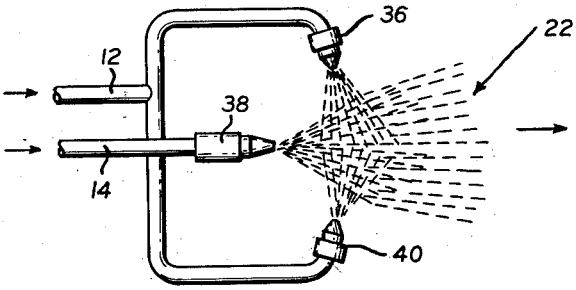

INVENTORS
CLIFFORD D. BAUER
ROBERT M. MARKS
BY
ROBERT CALVERT
ATTORNEY