United States Patent [19]

Crimmins, Jr.

[11] **Patent Number: 4,516,939**

[45] **Date of Patent: May 14, 1985**

[54] **FINGER CONTROL SYSTEM**

[75] Inventor: **Arthur G. Crimmins, Jr.**, Tillamook, Oreg.

[73] Assignee: **Quill Licensing**, Ottowa, Canada

[21] Appl. No.: **370,195**

[22] Filed: **Apr. 21, 1982**

Related U.S. Application Data

[63] Continuation-in-part of Ser. No. 42,077, May 24, 1979, abandoned.

[51] **Int. Cl.**[3] **G09B 21/00**

[52] **U.S. Cl.** ..... **434/114**; 434/258; 200/6 A; 340/407; 340/365 R; 400/492; 400/389

[58] **Field of Search** ..... 434/30, 32–34, 434/37, 38, 45, 46, 49, 55–59, 112–116, 185, 227–232, 258; 273/DIG. 28, 1 GC; 200/6 A; 340/407, 365 R; 400/489, 492

[56] **References Cited**

U.S. PATENT DOCUMENTS

2,657,476	11/1953	Holcombe	434/30
3,021,611	2/1962	Goodell et al.	434/231
3,022,878	2/1962	Seibel et al.	340/365 R
3,166,856	1/1965	Uttal	434/233
3,277,587	11/1966	Holcombe	434/233
3,428,747	2/1969	Alferieff	340/365 R
3,723,687	3/1973	Adkinson	200/18
3,781,802	12/1973	Kafafian	434/112
3,831,296	8/1974	Hagle	434/112
3,869,812	3/1975	Arakelian et al.	434/258
3,894,346	7/1975	Ward et al.	434/228
3,982,236	9/1976	Kafafian	340/407
4,044,475	8/1977	Fujisawa et al.	434/231
4,074,444	2/1978	Langer et al.	434/112
4,095,791	6/1978	Smith et al.	273/85 G
4,216,965	8/1980	Morrison et al.	273/1 E
4,350,055	9/1982	Pinomäki	200/6 A

FOREIGN PATENT DOCUMENTS

308048	9/1918	Fed. Rep. of Germany	400/489

Primary Examiner—Vance Y. Hum
Assistant Examiner—Leo P. Picard
Attorney, Agent, or Firm—John G. Abramo

[57] **ABSTRACT**

The invention is a method and apparatus for utilizing finger control switches connected to a binary code receiver for the purpose of driving a printer and/or a visual and/or audible readout device. The device is made up of a number of switches normally in the open position which can be depressed to a closed position. The input from the switches is communicated to a binary code receiver, which activates a printer, a visual readout or an audible device. The apparatus is used both for communication to other equipment and as a teaching device for physically demonstrating the combination of switch positions required to produce a given command.
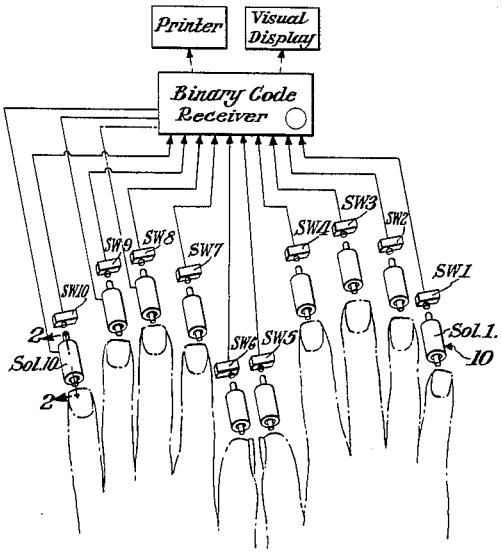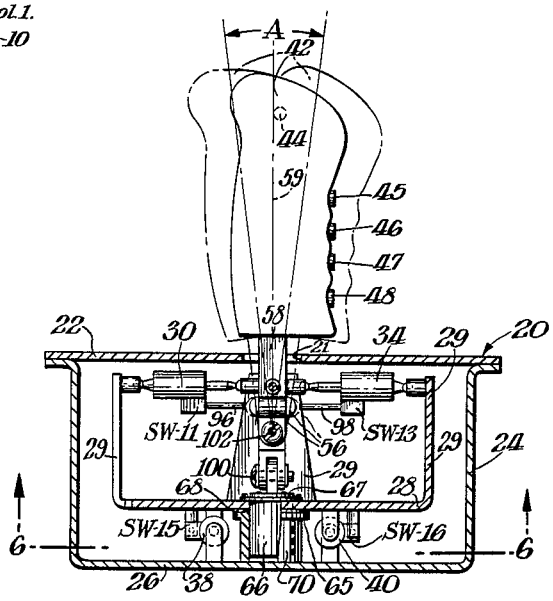
10 Claims, 7 Drawing Figures