US009410539B2

(12) **United States Patent**
Manzoni

(10) **Patent No.: US 9,410,539 B2**
(45) **Date of Patent: Aug. 9, 2016**

(54) **MICRO-NOZZLE THRUSTER**

(75) Inventor: **Giulio Manzoni**, Singapore (SG)

(73) Assignee: **MICROSPACE RAPID PTE LTD**, Singapore (SG)

(*) Notice: Subject to any disclaimer, the term of this patent is extended or adjusted under 35 U.S.C. 154(b) by 954 days.

(21) Appl. No.: **13/577,657**

(22) PCT Filed: **Feb. 8, 2011**

(86) PCT No.: **PCT/SG2011/000055**

§ 371 (c)(1),
(2), (4) Date: **Aug. 7, 2012**

(87) PCT Pub. No.: **WO2011/096899**

PCT Pub. Date: **Aug. 11, 2011**

(65) **Prior Publication Data**

US 2012/0318886 A1 Dec. 20, 2012

(30) **Foreign Application Priority Data**

Feb. 8, 2010 (SG) 201000910-8

(51) **Int. Cl.**

B64G 1/40	(2006.01)
F03H 1/00	(2006.01)
H05H 1/50	(2006.01)
H05H 1/54	(2006.01)

(52) **U.S. Cl.**

CPC ***F03H 1/0037*** (2013.01); ***B64G 1/40*** (2013.01); ***B64G 1/405*** (2013.01); ***B64G 1/406*** (2013.01); ***F03H 1/00*** (2013.01); ***F03H 1/0043*** (2013.01); ***F03H 1/0056*** (2013.01); ***F03H 1/0081*** (2013.01); ***F03H 1/0087*** (2013.01); ***F03H 1/0093*** (2013.01); ***H05H 1/50*** (2013.01); ***H05H 1/54*** (2013.01)

(58) **Field of Classification Search**

CPC B64G 1/405; B64G 1/406; F03H 1/0037; F03H 1/0043; F03H 1/0056; F03H 1/0081; F03H 1/0087; F03H 1/0093

See application file for complete search history.

(56) **References Cited**

U.S. PATENT DOCUMENTS

3,537,266 A * 11/1970 Magnuson F03H 1/0043 313/362.1
4,209,703 A * 6/1980 Delcroix ..... F03H 1/0056 250/423 R
4,548,033 A * 10/1985 Cann B64G 1/406 313/231.41
4,577,461 A * 3/1986 Cann 60/203.1
4,577,462 A * 3/1986 Robertson F02K 1/386 181/220

(Continued)

FOREIGN PATENT DOCUMENTS

WO 00/58989 10/2000

OTHER PUBLICATIONS

ISR and WO for PCT/SG2011/000055 completed on May 16, 2011 and May 9, 2011.

Primary Examiner — Phutthiwat Wongwian
Assistant Examiner — William Breazeal
(74) *Attorney, Agent, or Firm* — Ladas & Parry, LLP

(57) **ABSTRACT**

A micro-nozzle thruster comprising a micro-nozzle having an inlet at a first end perpendicularly aligned gas supply channel at a first end, and a thruster outlet at a second opposed end; said inlet in fluid communication with a gas supply channel, said gas supply channel perpendicularly aligned with a longitudinal axis of the micro-nozzle; a cathode within the gas supply channel and an anode external to the gas supply channel and proximate to the inlet, so as to create a plasma flow from said gas.
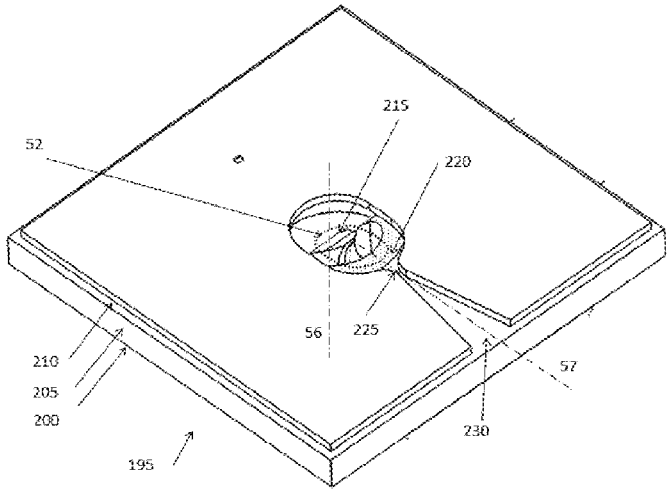
16 Claims, 15 Drawing Sheets