US009410439B2

(12) **United States Patent**
Luczak

(10) **Patent No.: US 9,410,439 B2**
(45) **Date of Patent: Aug. 9, 2016**

(54) **CMC BLADE ATTACHMENT SHIM RELIEF**

(75) Inventor: **Blake J. Luczak**, Pittsburgh, PA (US)

(73) Assignee: **United Technologies Corporation**, Hartford, CT (US)

(*) Notice: Subject to any disclaimer, the term of this patent is extended or adjusted under 35 U.S.C. 154(b) by 876 days.

(21) Appl. No.: **13/617,961**

(22) Filed: **Sep. 14, 2012**

(65) **Prior Publication Data**

US 2014/0079559 A1 Mar. 20, 2014

(51) **Int. Cl.**
F01D 5/30 (2006.01)
F01D 5/28 (2006.01)

(52) **U.S. Cl.**
CPC ***F01D 5/3007*** (2013.01); ***F01D 5/284*** (2013.01); ***F01D 5/3092*** (2013.01); *F05D 2250/71* (2013.01); *F05D 2300/6033* (2013.01); *F05D 2300/611* (2013.01); *Y02T 50/672* (2013.01)

(58) **Field of Classification Search**
CPC F01D 5/282; F01D 5/288; F01D 5/3007; F01D 5/3084; F01D 5/3092; F01D 5/326; F01D 5/3015; F01D 5/3069; F01D 5/323; F01D 5/284; F05D 2250/71; F05D 2300/6033; F05D 2300/611; Y02T 50/672
See application file for complete search history.

(56) **References Cited**

U.S. PATENT DOCUMENTS

4,767,274 A * 8/1988 Walter ..... 416/193 A
6,290,466 B1 9/2001 Ravenhall et al.
6,533,550 B1 3/2003 Mills
6,751,863 B2 * 6/2004 Tefft 29/889.21
6,857,856 B2 2/2005 Potter et al.
6,860,722 B2 * 3/2005 Forrester et al. ..... 416/219 R
6,910,866 B2 * 6/2005 Bassot et al. 416/221
7,223,465 B2 5/2007 Subramanian et al.
7,300,255 B2 11/2007 Potter et al.
7,329,101 B2 2/2008 Carper et al.

(Continued)

FOREIGN PATENT DOCUMENTS

FR 2959271 A1 10/2011
JP H08326503 A 12/1996

(Continued)

OTHER PUBLICATIONS

International Search Report and Written Opinion, dated Jun. 24, 2014, for PCT Application No. PCT/US2013/059033, 15 pages.

(Continued)

Primary Examiner — Christopher Verdier
Assistant Examiner — Adam W Brown
(74) *Attorney, Agent, or Firm* — Kinney & Lange, P.A.

(57) **ABSTRACT**

A blade root shim comprises a base, a suction side shim wall, a pressure side shim wall, and a contact relief region. The base extends longitudinally between a leading shim end and a trailing shim end. The suction side shim wall extends along the base and corresponds to a suction side blade root bearing surface. The pressure side shim wall, spaced circumferentially apart from the suction shim wall, corresponds to a pressure side blade bearing surface. The contact relief region is formed into an upper wall portion of either the suction side shim wall or the pressure side shim wall.
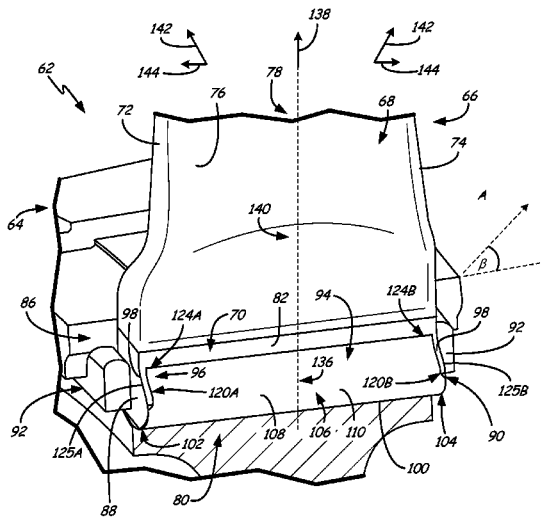
22 Claims, 7 Drawing Sheets