US009410339B2

(12) **United States Patent**
Gardner et al.

(10) **Patent No.: US 9,410,339 B2**
(45) **Date of Patent: Aug. 9, 2016**

(54) **EXPANDABLE DATA CENTER WITH MOVABLE WALL**

(71) Applicant: **Amazon Technologies, Inc.**, Reno, NV (US)

(72) Inventors: **Brock Robert Gardner**, Seattle, WA (US); **Michael Phillip Czamara**, Seattle, WA (US)

(73) Assignee: **Amazon Technologies, Inc.**, Reno, NV (US)

(*) Notice: Subject to any disclaimer, the term of this patent is extended or adjusted under 35 U.S.C. 154(b) by 0 days.

(21) Appl. No.: **14/486,763**

(22) Filed: **Sep. 15, 2014**

(65) **Prior Publication Data**

US 2015/0000214 A1 Jan. 1, 2015

Related U.S. Application Data

(63) Continuation of application No. 13/603,348, filed on Sep. 4, 2012, now Pat. No. 8,833,001.

(51) **Int. Cl.**

E04B 1/343	(2006.01)
E04H 5/00	(2006.01)
H05K 7/14	(2006.01)
H05K 7/20	(2006.01)
E04B 1/66	(2006.01)
E04H 1/00	(2006.01)

(52) **U.S. Cl.**

CPC ***E04H 5/00*** (2013.01); ***E04B 1/34384*** (2013.01); ***E04B 1/66*** (2013.01); ***E04H 1/00*** (2013.01); ***H05K 7/1497*** (2013.01); ***H05K 7/20745*** (2013.01); *E04H 2005/005* (2013.01)

(58) **Field of Classification Search**

CPC E04B 1/34384; H05K 7/1497; H05K 7/20745; E04H 2005/005

USPC 52/64, 66, 67, 79.1, 79.5, 79.7, 79.8, 52/243.1, 745.1

See application file for complete search history.

(56) **References Cited**

U.S. PATENT DOCUMENTS

2,901,282	A *	8/1959	Meaker	296/171
3,298,143	A *	1/1967	Rogers et al.	52/64
3,748,793	A *	7/1973	Tompkins et al.	52/64
3,835,600	A *	9/1974	Padula et al.	52/67

(Continued)

FOREIGN PATENT DOCUMENTS

JP	H03202534	9/1991
JP	2006002419	1/2006

(Continued)

OTHER PUBLICATIONS

U.S. Appl. No. 12/491,941, filed Jun. 25, 2009, Osvaldo P. Morales.

(Continued)

Primary Examiner — Adriana Figueroa

(74) *Attorney, Agent, or Firm* — Robert C. Kowert; Meyertons, Hood, Kivlin, Kowert & Goetzel, P.C.

(57) **ABSTRACT**

A data center includes a floor that supports rack computing systems and walls that enclose a computing room. The computing room holds the rack computing systems. One of the walls is a movable wall. The movable wall translates relative to the other walls to increase or decrease the size of the computing room.
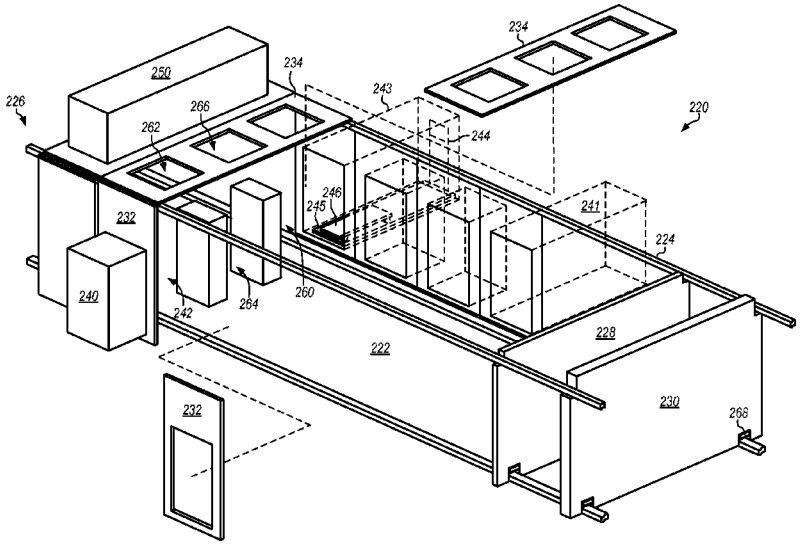
20 Claims, 12 Drawing Sheets