US009408439B2

(12) **United States Patent**
Barce et al.

(10) **Patent No.: US 9,408,439 B2**
(45) **Date of Patent: Aug. 9, 2016**

(54) **INTERCHANGEABLE DECORATIVE COVER FOR BUTTONS**

(71) Applicants: **Susan Michelle Barce**, Burke, VA (US); **Keith M Nystrom**, Burke, VA (US)

(72) Inventors: **Susan Michelle Barce**, Burke, VA (US); **Keith M Nystrom**, Burke, VA (US)

(*) Notice: Subject to any disclaimer, the term of this patent is extended or adjusted under 35 U.S.C. 154(b) by 81 days.

(21) Appl. No.: **13/605,165**

(22) Filed: **Oct. 24, 2012**

(65) **Prior Publication Data**

US 2014/0109346 A1 Apr. 24, 2014

(51) **Int. Cl.**
A44B 1/04 (2006.01)
A44B 1/14 (2006.01)

(52) **U.S. Cl.**
CPC ... ***A44B 1/04*** (2013.01); ***A44B 1/14*** (2013.01); *Y10T 24/367* (2015.01); *Y10T 24/3694* (2015.01)

(58) **Field of Classification Search**
CPC A44B 1/04; A44B 1/14; Y10T 24/3694; Y10T 24/367; Y10T 24/3672
USPC ..... 24/113 R, 113 MP, 114.9, 94, 95, 114.2; 215/356, 355; 220/288, 293, 297
See application file for complete search history.

(56) **References Cited**

U.S. PATENT DOCUMENTS

1,744,350 A * 1/1930 White et al. 24/95
1,821,615 A * 9/1931 Carley et al. 24/95
2,067,222 A * 1/1937 Wolff 40/315
2,067,223 A * 1/1937 Janes 40/315
2,067,224 A * 1/1937 Huckins 40/315
2,179,032 A * 11/1939 Carley et al. 24/95
3,141,211 A * 7/1964 Blake 24/114.9
4,158,251 A * 6/1979 Howell ..... A44B 1/04 24/113 MP
4,788,753 A * 12/1988 Sparrow et al. ..... 24/113 MP
4,941,234 A * 7/1990 Watanabe et al. ..... 24/113 MP
5,513,422 A * 5/1996 Wen-Lung 24/92
5,517,730 A * 5/1996 Ho 24/92
5,526,551 A * 6/1996 Herman ..... 24/113 MP
5,542,157 A * 8/1996 Herman ..... 24/113 MP
5,575,043 A * 11/1996 Candotti 24/114.4
5,644,820 A * 7/1997 Ho 24/92
6,266,853 B1 * 7/2001 Ho 24/92
6,457,213 B2 * 10/2002 Watanabe 24/94
7,251,865 B2 * 8/2007 Takamura et al. 24/114.4
2009/0217490 A1 * 9/2009 Lu 24/114.9
2010/0236028 A1 * 9/2010 Clark ..... 24/113 R
2011/0000052 A1 * 1/2011 Suter ..... A44B 1/08 24/113 R

* cited by examiner

Primary Examiner — Abigail Morrell
(74) *Attorney, Agent, or Firm* — Dennis H. Lambert

(57) **ABSTRACT**

A decorative cover for interchangeable attachment to buttons to change the appearance of the button. The decorative cover includes a base member with a hollow bore extending through at least one end thereof, and a decorative part permanently attached to an opposite end. An inner surface of the bore frictionally engages an outer edge of the button to retain the base member in place but permit it to be removed when desired. In one embodiment the base member is an elastomeric material having a durometer to enable the button to press into an inner surface of the bore. A detent may be provided in the bore to engage the button to assist in holding the decorative cover in place. In another embodiment the base member is longitudinally split into two semi-cylindrical segments that spread apart to enable a button to be engaged between them.
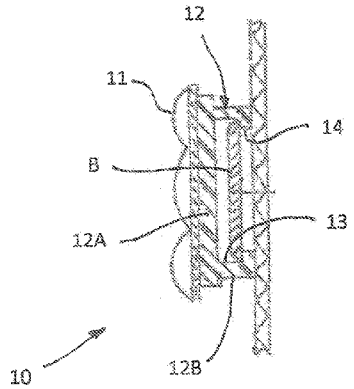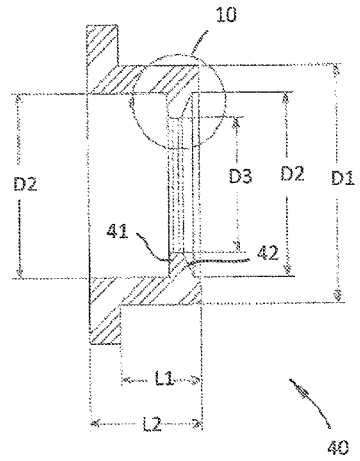
7 Claims, 5 Drawing Sheets