July 2, 1940.

A. V. BROGREN ET AL

2,206,739

CONCEALED DOOR HINGE

Filed June 8, 1938

2 Sheets-Sheet 1

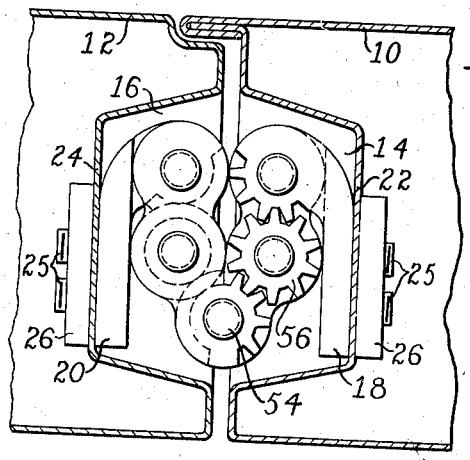

Fig. 1

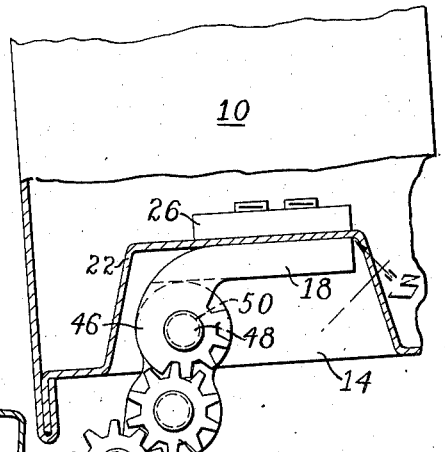

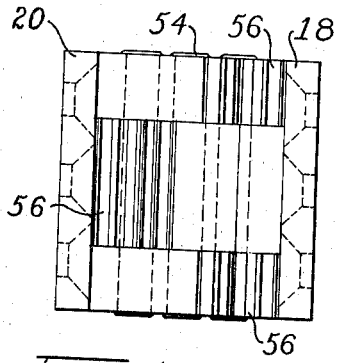

Fig. 4

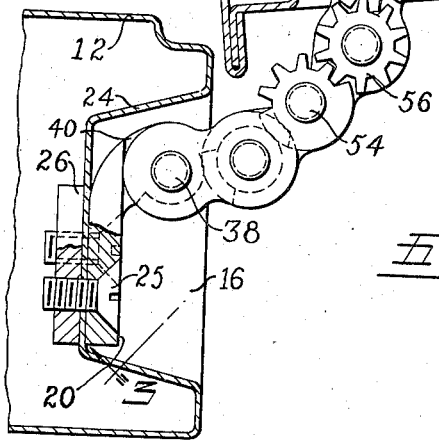

Fig. 2

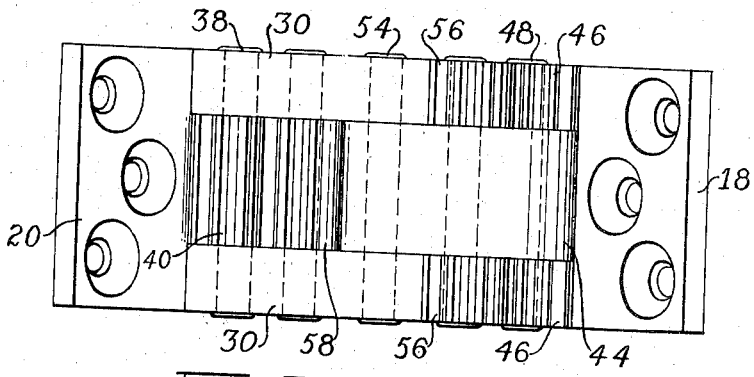

Fig. 3

INVENTOR.
AXEL V. BROGREN
JOHN T. PARSONS

BY

Parker & Burton
ATTORNEYS.