US007197338B2

(12) **United States Patent**
Ozawa

(10) **Patent No.: US 7,197,338 B2**
(45) **Date of Patent: Mar. 27, 2007**

(54) **DISPLAY DEVICE AND PORTABLE TERMINAL APPARATUS**

(75) Inventor: **Ryo Ozawa**, Saitama (JP)

(73) Assignee: **NEC Corporation**, Tokyo (JP)

(*) Notice: Subject to any disclaimer, the term of this patent is extended or adjusted under 35 U.S.C. 154(b) by 14 days.

(21) Appl. No.: **10/463,588**

(22) Filed: **Jun. 18, 2003**

(65) **Prior Publication Data**

US 2003/0234897 A1 Dec. 25, 2003

(30) **Foreign Application Priority Data**

Jun. 20, 2002 (JP) 2002-180526

(51) **Int. Cl.**
H04B 1/38 (2006.01)

(52) **U.S. Cl.** **455/566**; 455/575.1; 455/90.3; 349/61; 349/56

(58) **Field of Classification Search** 466/566, 466/575.1, 550.1, 575.3, 575.4, 90.2, 90.3; 349/56, 61, 62, 68
See application file for complete search history.

(56) **References Cited**

U.S. PATENT DOCUMENTS

5,450,619	A *	9/1995	Maeda	455/566
5,666,172	A	9/1997	Ida et al.	
6,011,602	A	1/2000	Miyashita et al.	
6,496,236	B1 *	12/2002	Cole et al.	349/61
6,611,097	B1 *	8/2003	Hanahara et al.	313/506
6,667,731	B2 *	12/2003	Park	345/102
6,741,301	B2 *	5/2004	Tsuji	349/58
6,748,243	B1 *	6/2004	Kubo et al.	455/569.1
6,757,036	B1 *	6/2004	Dolezal et al.	349/113
2001/0011029	A1 *	8/2001	Iwabuchi et al.	455/566
2001/0041543	A1 *	11/2001	Lim	455/90
2001/0049293	A1 *	12/2001	Shimazaki	455/550
2002/0039914	A1	4/2002	Hama et al.	
2002/0058527	A1 *	5/2002	Kawasaki et al.	455/550

FOREIGN PATENT DOCUMENTS

CN	1333621		1/2002
CN	1346225		4/2002
EP	0 631 416		12/1994
EP	0 802 446		10/1997
EP	0 881 617		12/1998
EP	1 231 757	A2	8/2002
GB	2343324	*	5/2000
JP	4-329516		11/1992
JP	6-86320		3/1994
JP	09243988		9/1997
JP	10-215085		8/1998
JP	11095215		4/1999
JP	2001-24762		1/2001
JP	2001-264732		9/2001
JP	2002-57776		2/2002
JP	2002-133927		5/2002
JP	2002-189230		7/2002

* cited by examiner

Primary Examiner—Edward F. Urban
Assistant Examiner—Blane Jackson
(74) *Attorney, Agent, or Firm*—Young & Thompson

(57) **ABSTRACT**

A display device includes a main LCD, a sub LCD, and a backlight. The main LCD displays information. The sub LCD is arranged to make its rear surface oppose that of the main LCD to display information different from that of the main LCD. The backlight illuminates the main LCD and sub LCD. A portable terminal apparatus is also disclosed.
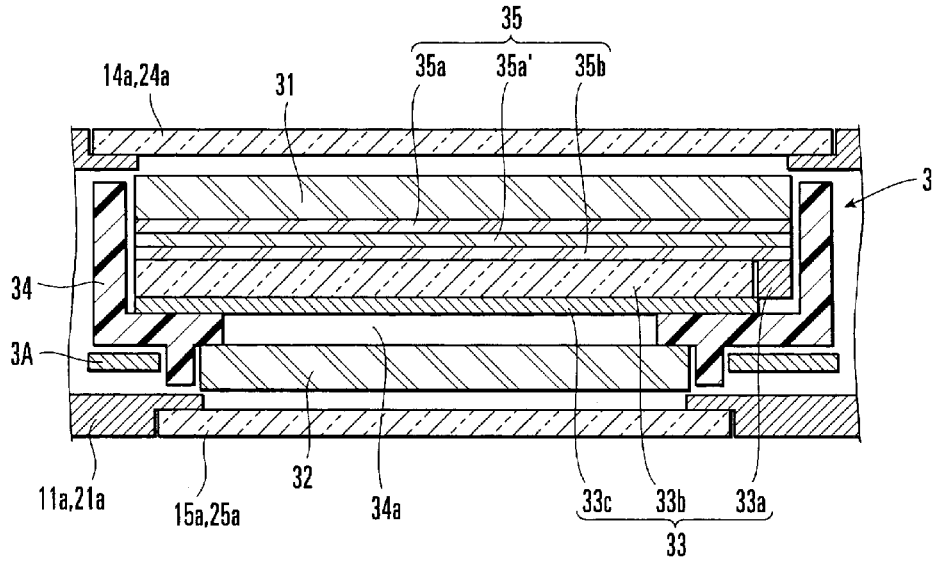
10 Claims, 12 Drawing Sheets