United States Patent [19]

Okita

[11] **4,193,138**

[45] **Mar. 18, 1980**

[54] **COMPOSITE STRUCTURE VASCULAR PROSTHESES**

[75] Inventor: **Koichi Okita**, Osaka, Japan

[73] Assignee: **Sumitomo Electric Industries, Ltd.**, Osaka, Japan

[21] Appl. No.: **825,513**

[22] Filed: **Aug. 17, 1977**

[30] **Foreign Application Priority Data**

Aug. 20, 1976 [JP] Japan 51-99808
Jul. 1, 1977 [JP] Japan 52-79387

[51] **Int. Cl.**[2] **A61F 1/24**
[52] **U.S. Cl.** **3/1.4**; 427/2
[58] **Field of Search** ..... 3/1, 1.4; 128/334 R; 427/2

[56] **References Cited**

U.S. PATENT DOCUMENTS

3,094,762 6/1963 Jeckel ..... 3/1 X
3,511,684 5/1970 Huffaker ..... 3/1.4 X

FOREIGN PATENT DOCUMENTS

2508570 10/1975 Fed. Rep. of Germany 3/1.4

OTHER PUBLICATIONS

Campbell et al., "Expanded Polytetrafluoro-Ethylene as a Small Artery Substitute"; vol. XX, Trans. Amer. Soc. Artif. Int. Organs, 1974, pp. 86–90.

Primary Examiner—Clifford D. Crowder
Attorney, Agent, or Firm—Sughrue, Rothwell, Mion, Zinn and Macpeak

[57] **ABSTRACT**

A composite structure vascular prosthesis comprising a porous polytetrafluoroethylene tube in which the pores of the porous polytetrafluoroethylene tube are filled with at least one water-insolubilized water-soluble polymer, and a process for producing the composite structure vascular prosthesis.
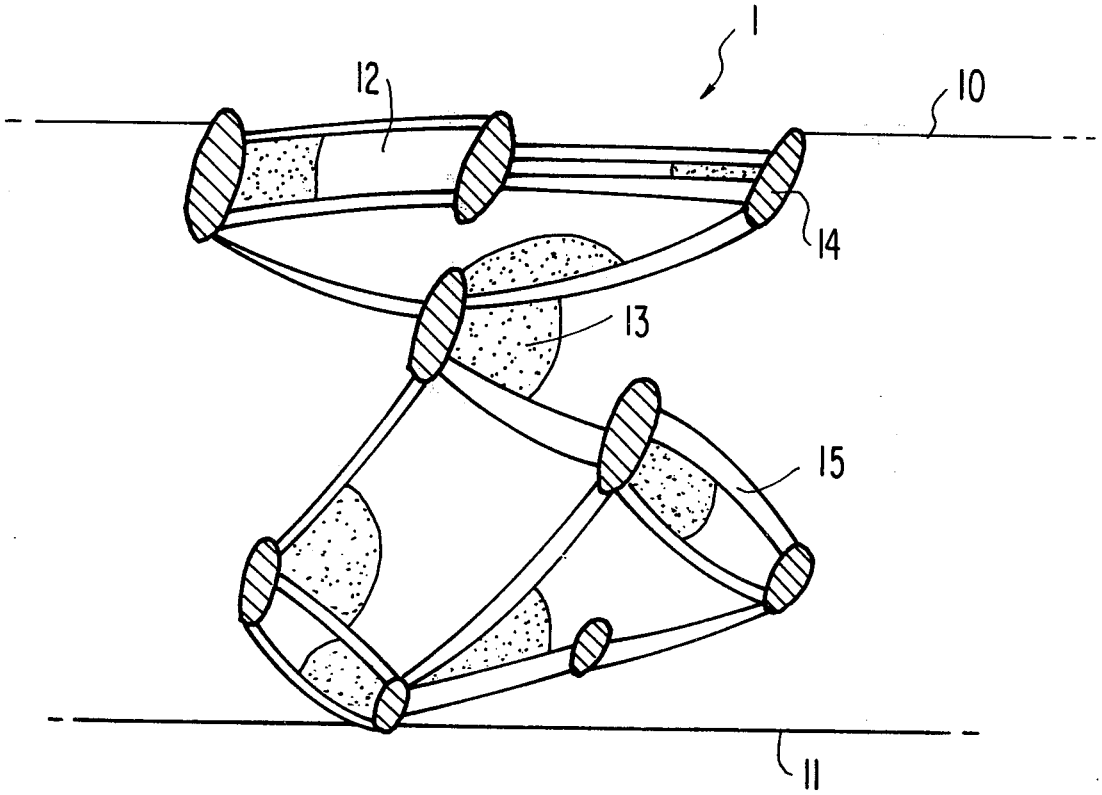
28 Claims, 6 Drawing Figures