US008190338B2

(12) **United States Patent**
Commuri

(10) **Patent No.: US 8,190,338 B2**
(45) **Date of Patent: May 29, 2012**

(54) **METHOD AND APPARATUS FOR COMPACTION OF ROADWAY MATERIALS**

(75) Inventor: **Sesh Commuri**, Norman, OK (US)

(73) Assignee: **The Board of Regents of the University of Oklahoma**, Norman, OK (US)

(*) Notice: Subject to any disclaimer, the term of this patent is extended or adjusted under 35 U.S.C. 154(b) by 454 days.

(21) Appl. No.: **12/583,838**

(22) Filed: **Aug. 26, 2009**

(65) **Prior Publication Data**

US 2010/0172696 A1 Jul. 8, 2010
US 2011/0293369 A9 Dec. 1, 2011

Related U.S. Application Data

(60) Provisional application No. 61/190,715, filed on Sep. 2, 2008.

(51) **Int. Cl.**
G06F 7/70 (2006.01)
G01N 29/00 (2006.01)
G01N 9/00 (2006.01)

(52) **U.S. Cl.** ..... **701/50**; 73/1.82; 73/32 A

(58) **Field of Classification Search** ..... 701/50; 702/87, 88, 103, 137; 700/275; 73/1.82, 73/1.88, 32 A, 12.12, 573, 594, 579; 404/75, 404/102, 103, 84.1, 117
See application file for complete search history.

(56) **References Cited**

U.S. PATENT DOCUMENTS

3,998,090 A 12/1976 Wislocki
4,103,554 A 8/1978 Thurner
5,402,667 A 4/1995 Atkinson et al.
5,493,494 A * 2/1996 Henderson 701/50
5,727,900 A 3/1998 Sandstrom
6,122,601 A 9/2000 Swanson et al.
6,431,790 B1 8/2002 Anderegg et al.
6,551,019 B1 4/2003 Motz
6,577,141 B2 6/2003 Gandrud
6,604,432 B1 8/2003 Hamblen et al.
6,742,960 B2 * 6/2004 Corcoran et al. 404/117
6,752,567 B2 * 6/2004 Miyamoto et al. 404/84.1
6,786,077 B2 9/2004 Baumoel et al.
6,829,986 B2 12/2004 Richter
6,912,903 B2 7/2005 Hamblen et al.
6,925,879 B2 * 8/2005 Raichle 73/579
6,941,793 B2 9/2005 Rioux
7,191,062 B2 * 3/2007 Chi et al. 702/2
7,216,543 B2 5/2007 Paik et al.

(Continued)

OTHER PUBLICATIONS

Geodynamik Catalog ALFA-030, "Compactometer, compaction meter for vibratory rollers," entire catalog, undated but admitted to be prior art.

(Continued)

Primary Examiner — Thomas Will
Assistant Examiner — Abigail A Risic
(74) *Attorney, Agent, or Firm* — McAfee & Taft

(57) **ABSTRACT**

A method of compacting a roadway section includes entering initial input parameters into a compaction analyzer. A plurality of passes is made with a roller over a portion of the roadway section and vibratory energy is applied thereto. Responsive vibration signals are gathered and the compaction analyzer generates estimated density signals. Actual density measurements are taken and the estimated densities are compared thereto. Selected ones of the initial input parameters are adjusted so that an adjusted density output signal which represents the actual density of a roadway section is generated.
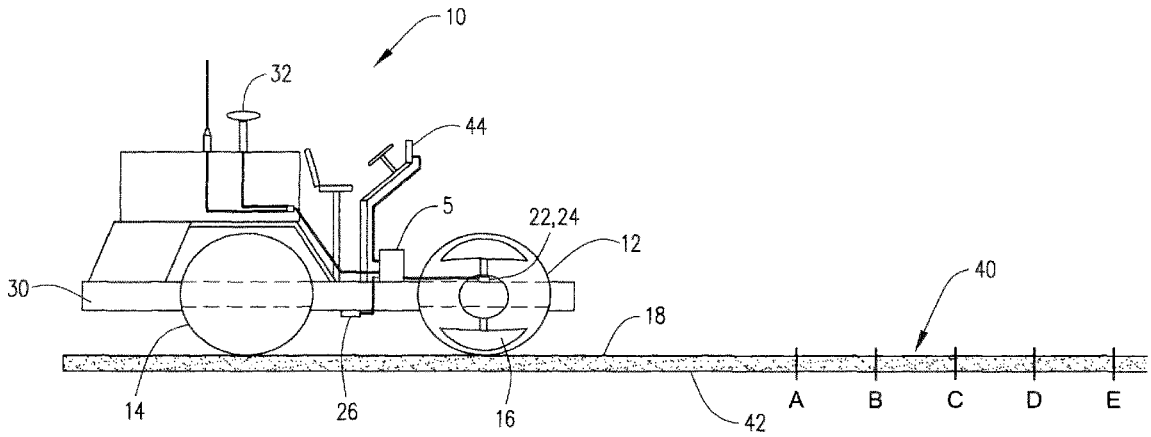
48 Claims, 5 Drawing Sheets
(2 of 5 Drawing Sheet(s) Filed in Color)