May 7, 1968 P. ARSENEAULT ETAL 3,382,338

PUSHBUTTON ACTUATOR FOR ELASTOMERIC SWITCH

Filed April 26, 1966

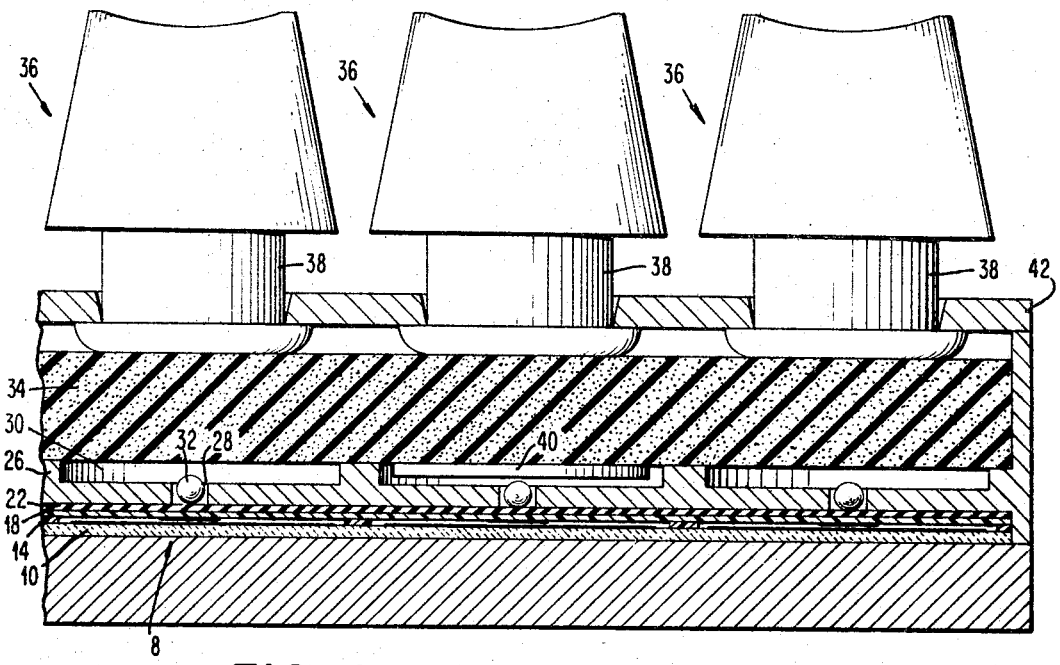

FIG. 1

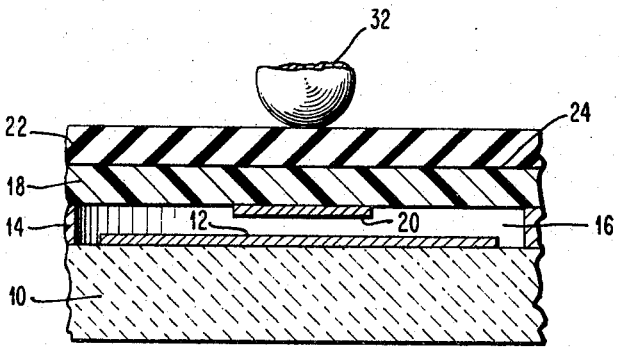

FIG. 2

INVENTORS
PAUL ARSENEAULT
SILVIO U. BLASKOVIC
LARRY G. LANKFORD

BY John J. Goodwin

ATTORNEY