US009468438B2

(12) **United States Patent**
Baber et al.

(10) **Patent No.: US 9,468,438 B2**
(45) **Date of Patent: Oct. 18, 2016**

(54) **SENSOR STRAIGHTENED END EFFECTOR DURING REMOVAL THROUGH TROCAR**

(71) Applicant: **Ethicon Endo-Surgery, Inc.**, Cincinnati, OH (US)

(72) Inventors: **Daniel L. Baber**, Liberty Township, OH (US); **Richard L. Leimbach**, Cincinnati, OH (US); **Thomas E. Albrecht**, Campbell, CA (US)

(73) Assignee: **Eticon Endo-Surgery, LLC**, Guaynabo, PR (US)

(*) Notice: Subject to any disclaimer, the term of this patent is extended or adjusted under 35 U.S.C. 154(b) by 634 days.

(21) Appl. No.: **13/782,481**

(22) Filed: **Mar. 1, 2013**

(65) **Prior Publication Data**

US 2014/0246479 A1 Sep. 4, 2014

(51) **Int. Cl.**
A61B 17/068 (2006.01)

(52) **U.S. Cl.**
CPC ***A61B 17/068*** (2013.01)

(58) **Field of Classification Search**
CPC A61B 17/068; A61B 17/07214; A61B 17/07207
USPC 173/181.1
See application file for complete search history.

(56) **References Cited**

U.S. PATENT DOCUMENTS

66,052	A	6/1867	Smith
662,587	A	11/1900	Blake
670,748	A	3/1901	Weddeler
951,393	A	3/1910	Hahn
1,306,107	A	6/1919	Elliott
1,314,601	A	9/1919	McCaskey
1,677,337	A	7/1928	Grove
1,794,907	A	3/1931	Kelly
2,037,727	A	4/1936	La Chapelle
2,132,295	A	10/1938	Hawkins
2,161,632	A	6/1939	Nattenheimer
2,211,117	A	8/1940	Hess
2,214,870	A	9/1940	West
2,318,379	A	5/1943	Davis et al.
2,441,096	A	5/1948	Happe
2,526,902	A	10/1950	Rublee

(Continued)

FOREIGN PATENT DOCUMENTS

AU	2008207624	A1	3/2009
AU	2010214687	A1	9/2010

(Continued)

OTHER PUBLICATIONS

International Search Report for PCT/US2014/018271, dated Jul. 3, 2014 (6 pages).

(Continued)

Primary Examiner — Gloria R Weeks

(57) **ABSTRACT**

In various forms, a sensor-straightened end effector is disclosed. The sensor-straightened end effector may comprise an end effector coupled to a shaft at an articulation point. The end effector may be articulable at an angle with respect to the shaft. A sensor may be disposed on the sensor-straightened end effector, such as on the shaft or on the end effector. The sensor is configured to detect a gross proximal movement. When detecting a gross proximal movement, the sensor may generate a signal to control a motor to begin a straightening process to straighten the end effector with respect to the shaft.
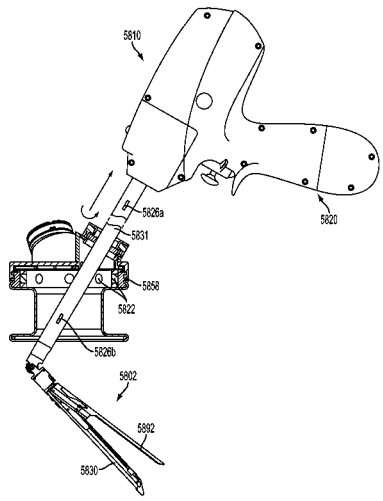
20 Claims, 99 Drawing Sheets