US006255938B1

(12) **United States Patent**
Bornschein

(10) **Patent No.: US 6,255,938 B1**
(45) **Date of Patent: Jul. 3, 2001**

(54) **DEVICE FOR THE INPUT AND READ-OUT OF DATA**

(75) Inventor: **Hans-Jürgen Bornschein**, Schwerte (DE)

(73) Assignee: **F. H. Papenmeier Gmbh & Co. KG**, Schwerte (DE)

(*) Notice: Subject to any disclaimer, the term of this patent is extended or adjusted under 35 U.S.C. 154(b) by 0 days.

(21) Appl. No.: **09/334,498**

(22) Filed: **Jun. 17, 1999**

(30) **Foreign Application Priority Data**

Jun. 23, 1998 (DE) 198 27 905

(51) **Int. Cl.**[7] **H04B 3/36**

(52) **U.S. Cl.** **340/407.2**; 340/407.1; 434/113; 434/114; 434/117; 341/21

(58) **Field of Search** 340/407.1, 407.2; 434/113, 114, 115, 117; 345/168; 341/21

(56) **References Cited**

U.S. PATENT DOCUMENTS

4,985,692 * 1/1991 Breider et al. 340/407.1
5,164,712 11/1992 Niitsuma .
6,059,575 * 5/2000 Murphy 434/112

FOREIGN PATENT DOCUMENTS

4241937 A1 * 6/1994 (DE) .
42 41 937 6/1994 (DE) .
196 13318 7/1997 (DE) .

* cited by examiner

Primary Examiner—Julie Lieu
(74) *Attorney, Agent, or Firm*—Armstrong, Westerman, Hattori, McLeland & Naughton, LLP

(57) **ABSTRACT**

The invention relates to a data input/read-out device, including at least one output element, more particularly a Braille element, for outputting Braille data by correspondingly changing the surface profile; and at least one input element for inputting data, the input element being positionable in at least two different positions to thus enter data wherein the maximum spacing between the at least one input element and the at least one output element does not exceed a specific maximum value so that the input element and the output element can be touched or actuated simultaneously by one hand.
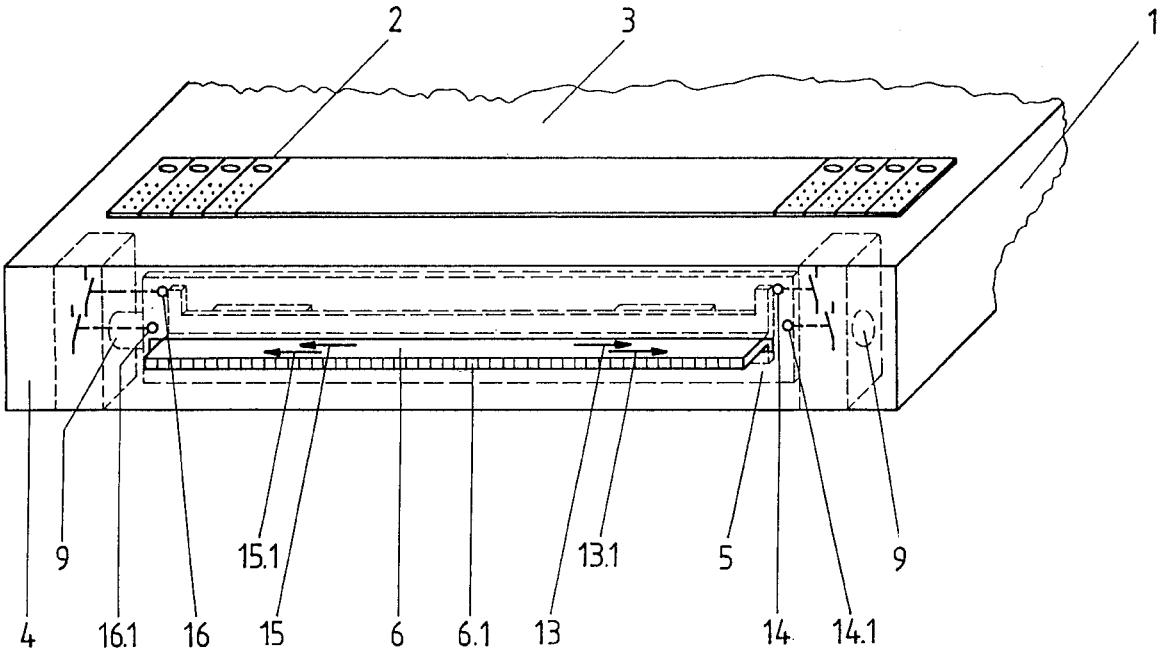
17 Claims, 1 Drawing Sheet