United States Patent [19]

Yamamura

[11] **Patent Number: 4,951,038**

[45] **Date of Patent: Aug. 21, 1990**

[54] **APPARATUS FOR DISPLAYING A SPRITE ON A SCREEN**

[75] Inventor: **Kimio Yamamura**, Tokyo, Japan

[73] Assignee: **Hudson Soft Co., Ltd.**, Hokkaido, Japan

[21] Appl. No.: **160,154**

[22] Filed: **Feb. 25, 1988**

[30] **Foreign Application Priority Data**

May 15, 1987	[JP]	Japan	62-118595
May 15, 1987	[JP]	Japan	62-118596
May 20, 1987	[JP]	Japan	62-123050
Sep. 25, 1987	[JP]	Japan	62-241172

[51] **Int. Cl.**[5] **G09G 5/30**

[52] **U.S. Cl.** **340/725**; 340/724; 340/747

[58] **Field of Search** ..... 340/725, 735, 747, 748, 340/724; 273/84 G, 1 E; 324/77 B; 434/157; 84/484

[56] **References Cited**

U.S. PATENT DOCUMENTS

4,324,401	4/1982	Stubben et al.	340/725
4,462,594	7/1984	Bromley et al.	273/85 G
4,510,840	4/1985	Inami et al.	324/77 B
4,546,690	10/1985	Tanaka et al.	84/484
4,552,360	11/1985	Bromley et al.	273/85 G
4,672,541	6/1987	Bromley et al.	273/1 E
4,710,877	12/1987	Ahmed	434/157
4,813,671	3/1989	Charpentier	340/725

FOREIGN PATENT DOCUMENTS

11390 2/1982 Japan .

OTHER PUBLICATIONS

Guttag et al-"Video Display Processor Simulates Three Dimensions"-Electronics-Nov./20/80-pp. 123-126.

Guttag et al-"Video Display Processor"-IEEE Transaction Consumer Electronics, vol. CE-27, Feb. 1981-pp. 27-34.

Primary Examiner—Alvin Oberley
Assistant Examiner—M. Fatahiyar
Attorney, Agent, or Firm—Lowe, Price, LeBlanc, Becker & Shur

[57] **ABSTRACT**

Apparatus for displaying a sprite on a screen comprises sprite attribute tables each including coordinates indicating a display position of a sprite, a pattern code defining the sprite in regard to pattern data, and control data defining a display mode of the sprite. A sprite generator is addressed in accordance with the pattern code to supply the pattern data of a sprite to a pattern data buffer. The sprite is displayed in accordance with the coordinates thereof on the screen. Therefore, the sprite is moved on the screen only by changing the coordinates of a corresponding sprite attribute table.
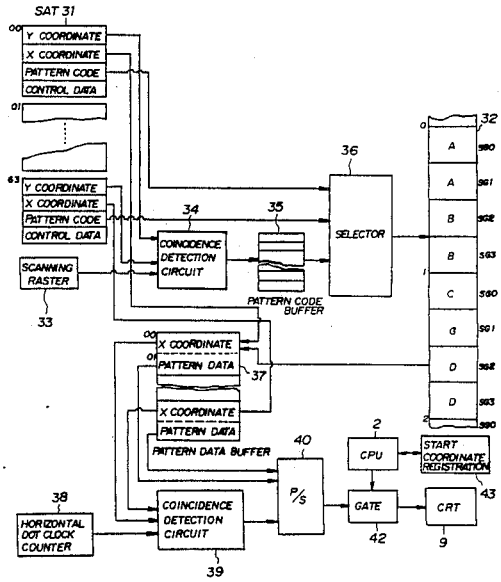
4 Claims, 16 Drawing Sheets