219-121 SR
10/29/85 OR 4,550,238

United States Patent [19]
Van Herle et al.

[11] **Patent Number: 4,550,238**
[45] **Date of Patent: Oct. 29, 1985**

[54] **APPARATUS AND METHOD FOR SEALING CAPSULES**

[75] Inventors: **Louis Van Herle**, Zandhoven, Belgium; **Fritz Wittwer**, Lupsingen, Switzerland

[73] Assignee: **Warner-Lambert Company**, Morris Plains, N.J.

[21] Appl. No.: **439,514**

[22] Filed: **Nov. 5, 1982**

[51] **Int. Cl.**[4] **B23K 26/00**
[52] **U.S. Cl.** ..... **219/121 LC**; 219/121 LD
[58] **Field of Search** ..... 219/121 LC, 121 LD, 219/121 LR, 121 LT, 121 LA, 121 LB; 220/DIG. 31, 80, 8; 206/530, 528; 156/272.8, 272.2, 275.3, 275.7; 264/25, 22, 26, 248, 249

[56] **References Cited**

U.S. PATENT DOCUMENTS

2,977,014 3/1961 Kock ..... 206/530 X
3,453,097 7/1969 Hafner ..... 219/121 LG X
3,769,117 10/1973 Bowen et al. ..... 219/121 LC X
3,920,951 11/1975 Chovan et al. ..... 219/121 LW
3,960,624 6/1976 Erlandson ..... 219/121 LA X
4,069,080 1/1978 Osborne ..... 219/121 LR X
4,172,219 10/1979 Deml et al. ..... 219/121 LT X
4,281,763 8/1981 Pace 206/530

Primary Examiner—C. L. Albritton
Attorney, Agent, or Firm—Alan H. Spencer; Stephen Raines

[57] **ABSTRACT**

Apparatus using a coherent mono-chromatic radiation source, preferably using a laser, for bonding capsule elements is disclosed. The systems described include means for providing a spot, short-line, or continuous seam. Also described are methods to enhance the bonding technique which utilize a small quantity of water or plasticol in the region to be bonded.
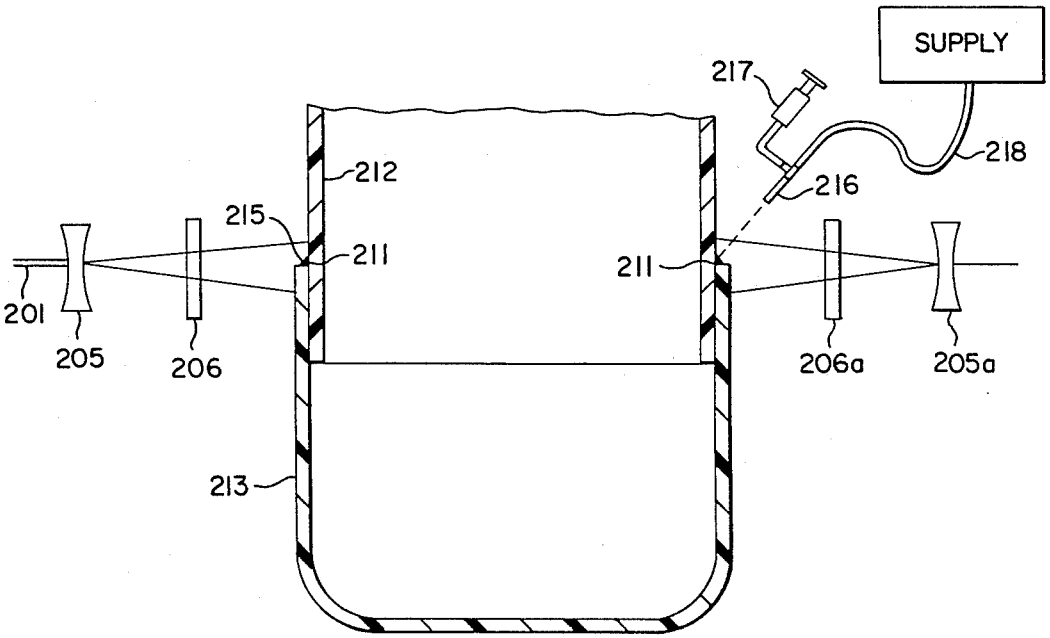
30 Claims, 3 Drawing Figures