FIG. 3
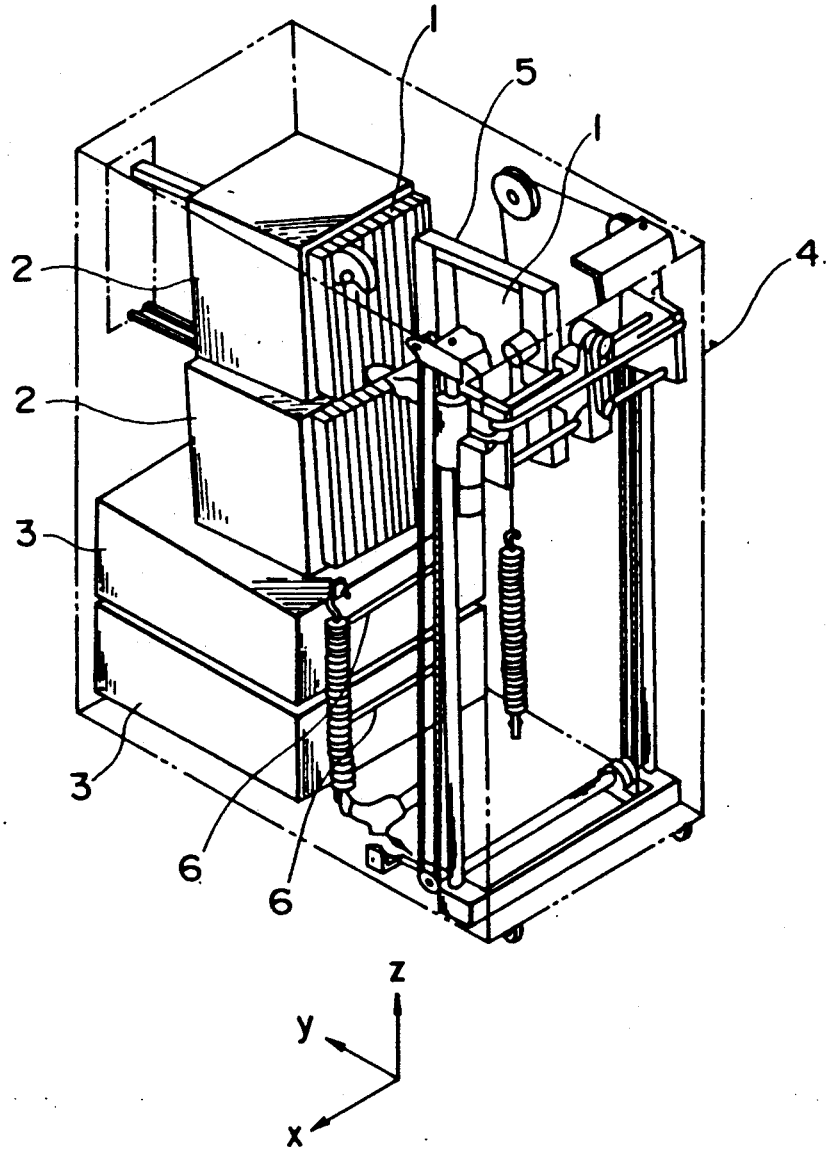
(PRIOR ART)