US005929538A

United States Patent [19]

O'Sullivan et al.

[11] **Patent Number: 5,929,538**

[45] **Date of Patent: Jul. 27, 1999**

[54] **MULTIMODE POWER PROCESSOR**

[75] Inventors: **George A. O'Sullivan**, Pottersville, N.J.; **Joseph A. O'Sullivan**, St. Louis, Mo.

[73] Assignee: **Abacus Controls Inc.**, Somerville, N.J.

[21] Appl. No.: **08/884,306**

[22] Filed: **Jun. 27, 1997**

[51] **Int. Cl.**[6] **H02J 7/00**

[52] **U.S. Cl.** **307/66**; 307/64; 307/44; 364/528.21

[58] **Field of Search** 307/43, 44, 45, 307/46, 47, 48, 49, 50, 51, 64, 65, 66, 85, 86, 87; 364/480, 492, 493, 528.21, 528.22, 528.23, 528.3, 528.32

[56] **References Cited**

U.S. PATENT DOCUMENTS

4,277,692	7/1981	Small	3067/66
4,287,465	9/1981	Godard et al. .	
4,528,457	7/1985	Keefe et al. .	
4,652,770	3/1987	Kumano .	
4,731,547	3/1988	Alenduff et al.	307/85
4,761,563	8/1988	Ross et al. .	
4,775,800	10/1988	Wood .	
5,010,469	4/1991	Bobry .	
5,057,697	10/1991	Hammond et al. .	
5,070,251	12/1991	Rodes et al. .	
5,126,585	6/1992	Boys .	
5,168,436	12/1992	Barlage .	
5,184,025	2/1993	McCurry et al. .	
5,198,698	3/1993	Paul et al. .	
5,198,970	3/1993	Kawabata et al. .	
5,229,651	7/1993	Baxter, Jr. et al. .	
5,241,217	8/1993	Severinsky .	
5,264,732	11/1993	Fiorina et al. .	
5,285,365	2/1994	Yamato et al. .	
5,289,045	2/1994	Lavin et al. .	
5,289,046	2/1994	Gregorich et al. .	
5,295,078	3/1994	Stich et al. .	
5,302,858	4/1994	Folts .	
5,332,927	7/1994	Paul et al. .	
5,384,792	1/1995	Hirachi .	
5,483,463	1/1996	Qin et al.	364/492
5,500,561	3/1996	Wilhelm	307/64
5,532,525	7/1996	Kaiser .	

OTHER PUBLICATIONS

Bower et al. (1990) IEEE AES Magazine, Aug., pp. 16–21.

O'Sullivan, G. (1988), PCIM Magazine, Dec. :42–6.

O'Sullivan, G. (1989), "Bimode UPS reduces systen complexity," European Power News, Nov./Dec., Hastings Printing Co. Ltd, East Sussex, England.

O'Sullivan, G. (1990), "The myth of On–Line UPS", Atlantic Tech., vol: 5, No: 10.

O'Sullivan, G. (1993), "Fault Tolerant Battery Power Recycling", Fourth Int. Conference, Sep. 7–Oct.1, Berlin, Germany, pp. 18–31.

Primary Examiner—Jeffrey Gaffin
Assistant Examiner—Jonathan S. Kaplan
Attorney, Agent, or Firm—Klauber & Jackson

[57] **ABSTRACT**

In one embodiment, a power processor which operates in three modes: an inverter mode wherein power is delivered from a battery to an AC power grid or load; a battery charger mode wherein the battery is charged by a generator; and a parallel mode wherein the generator supplies power to the AC power grid or load in parallel with the battery. In the parallel mode, the system adapts to arbitrary non-linear loads. The power processor may operate on a per-phase basis wherein the load may be synthetically transferred from one phase to another by way of a bumpless transfer which causes no interruption of power to the load when transferring energy sources. Voltage transients and frequency transients delivered to the load when switching between the generator and battery sources are minimized, thereby providing an uninterruptible power supply. The power processor may be used as part of a hybrid electrical power source system which may contain, in one embodiment, a photovoltaic array, diesel engine, and battery power sources.
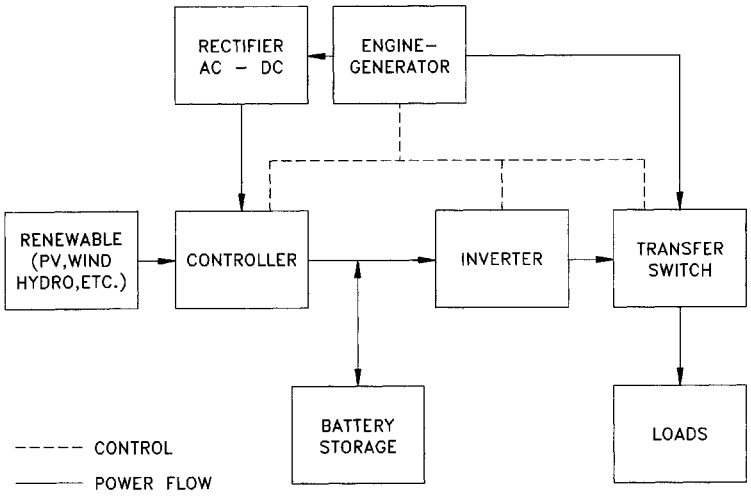
35 Claims, 25 Drawing Sheets