US006623638B2

(12) **United States Patent**
Watkins et al.

(10) **Patent No.: US 6,623,638 B2**
(45) **Date of Patent: Sep. 23, 2003**

(54) **HEMODIALYZER HAVING IMPROVED DIALYSATE PERFUSION**

(75) Inventors: **Randolph H. Watkins**, Wonder Lake, IL (US); **James S. Slepicka**, Spring Grove, IL (US); **Michael R. Prisco**, Geneva, IL (US)

(73) Assignee: **Baxter International Inc.**, Deerfield, IL (US)

(*) Notice: Subject to any disclaimer, the term of this patent is extended or adjusted under 35 U.S.C. 154(b) by 62 days.

(21) Appl. No.: **09/871,864**

(22) Filed: **Jun. 1, 2001**

(65) **Prior Publication Data**

US 2003/0080047 A1 May 1, 2003

(51) **Int. Cl.**[7] **B01D 63/02**; B01D 61/28

(52) **U.S. Cl.** **210/321.79**; 210/321.6; 210/321.72; 210/321.8; 210/321.88; 210/321.89; 210/456; 210/500.23

(58) **Field of Search** 210/321.6, 321.72, 210/321.79, 321.8, 321.88, 321.89, 450, 456, 500.23

(56) **References Cited**

U.S. PATENT DOCUMENTS

4,141,835	A		2/1979	Schäel et al.
4,201,673	A		5/1980	Kanno et al.
4,202,776	A		5/1980	Joh
4,219,426	A		8/1980	Spekle et al.
4,220,535	A		9/1980	Leonard
4,237,013	A		12/1980	Yamazaki et al.
4,242,203	A		12/1980	Amicel et al.
4,396,510	A	*	8/1983	Hsei 210/321.3
4,572,724	A		2/1986	Rosenberg et al.
4,639,353	A		1/1987	Takemura et al.
4,724,900	A		2/1988	Baurmeister et al.
4,876,012	A		10/1989	Kopp et al.
4,911,846	A		3/1990	Akasu et al.
4,919,802	A		4/1990	Katsura
5,053,130	A		10/1991	Raff et al.
5,072,498	A		12/1991	Raff et al.
5,084,244	A		1/1992	Muramoto
5,139,741	A		8/1992	Hagiwara
5,147,544	A		9/1992	Vescovini
5,160,615	A		11/1992	Takagi et al.
5,240,612	A		8/1993	Grangeon et al.
5,346,621	A		9/1994	Haworth et al.
5,352,361	A		10/1994	Prasad et al.
5,500,134	A		3/1996	Chahine
5,525,144	A		6/1996	Gollan
5,605,630	A		2/1997	Shibata
5,618,425	A		4/1997	Mitamura et al.
5,626,759	A		5/1997	Krantz et al.
5,632,894	A		5/1997	White et al.
5,700,372	A		12/1997	Takesawa et al.
5,782,791	A		7/1998	Peterson et al.
5,798,041	A		8/1998	Zuk, Jr.
5,817,279	A		10/1998	Eilers et al.
5,830,370	A		11/1998	Maloney, Jr. et al.
5,919,369	A		7/1999	Ash
5,938,940	A		8/1999	Zuk, Jr.
6,030,539	A		2/2000	Zuk, Jr.
6,074,559	A		6/2000	Hahmann et al.
6,113,782	A		9/2000	Leonard
6,176,904	B1		1/2001	Gupta

FOREIGN PATENT DOCUMENTS

DE	2839937 A1	4/1980
EP	0 968 730	1/2000
WO	WO 93/13941	7/1993
WO	98/22161	5/1998

* cited by examiner

Primary Examiner—John Kim
(74) *Attorney, Agent, or Firm*—Jane J. Choi; Paula Kelly; Robert M. Barrett

(57) **ABSTRACT**

A dialyzer is provided comprising a casing defining an interior and including a dialysate inlet and a dialysate outlet. A plurality of fibers are located in the interior of the casing and define a fiber bundle. A dialysate inlet fluid channel is provided in fluid communication with the dialysate inlet and includes a plurality of flutes that extend into a portion of the fiber bundles, the flutes define an opening for allowing dialysate to flow from the inlet fluid channel into the interior of the casing. Methods of providing dialysis are also provided.
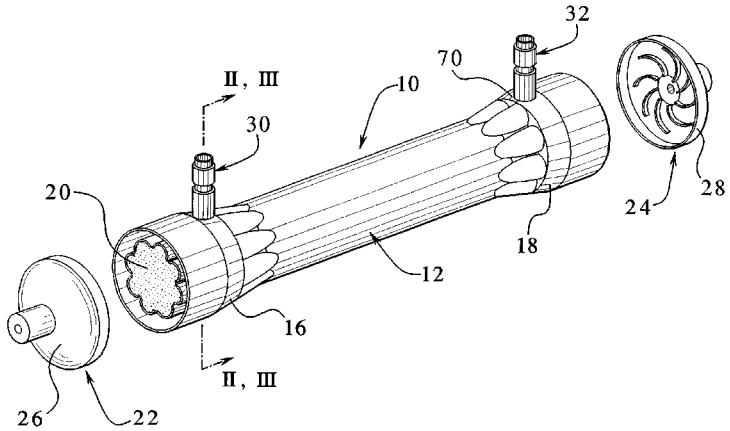
21 Claims, 2 Drawing Sheets