# United States Patent [19]

**Bird**

[11] **4,122,438**

[45] **Oct. 24, 1978**


[54] **POSITION ENCODING ARRANGEMENTS**


[75] Inventor: **Peter Frank Bird,** Chelmsford, England

[73] Assignee: **The Marconi Company Limited,** England



[21] Appl. No.: **760,554**

[22] Filed: **Jan. 19, 1977**

[30] **Foreign Application Priority Data**

Jan. 21, 1976 [GB] United Kingdom ..... 02269/76

[51] **Int. Cl.**[2] ..... **G06K 15/20**

[52] **U.S. Cl.** ..... **340/337;** 178/18; 250/549; 340/365 P

[58] **Field of Search** ..... 340/324 A, 324 AD, 337, 340/365 P, 166 EL; 178/18; 250/549


[56] **References Cited**

U.S. PATENT DOCUMENTS


| | | | |
|---|---|---|---|
| 3,292,489 | 12/1966 | Johnson et al. | 340/324 A |
| 3,576,574 | 4/1971 | Baskin et al. | 340/324 AD |
| 3,659,281 | 4/1972 | Mori | 340/324 A |
| 3,732,369 | 5/1973 | Cotter | 178/18 |
| 3,775,560 | 11/1973 | Ebeling et al. | 178/18 |
| 3,860,754 | 1/1975 | Johnson et al. | 340/365 P |


*Primary Examiner*—David L. Trafton

[57] **ABSTRACT**


A position encoding arrangement is provided having a position locating area from which the positioned co-ordinates of a probe in the area can be found. The invention provides for a change of magnification of the arrangement so that movement of the probe produces a scaled down change in positional co-ordinates. A preferred embodiment provides a light beam encoder for use in conjunction with a C.R.T. type display where a probe is detected and a marker appears on the screen. With the invention change in magnification allows scaled down movement of the marker to allow accurate positioning.

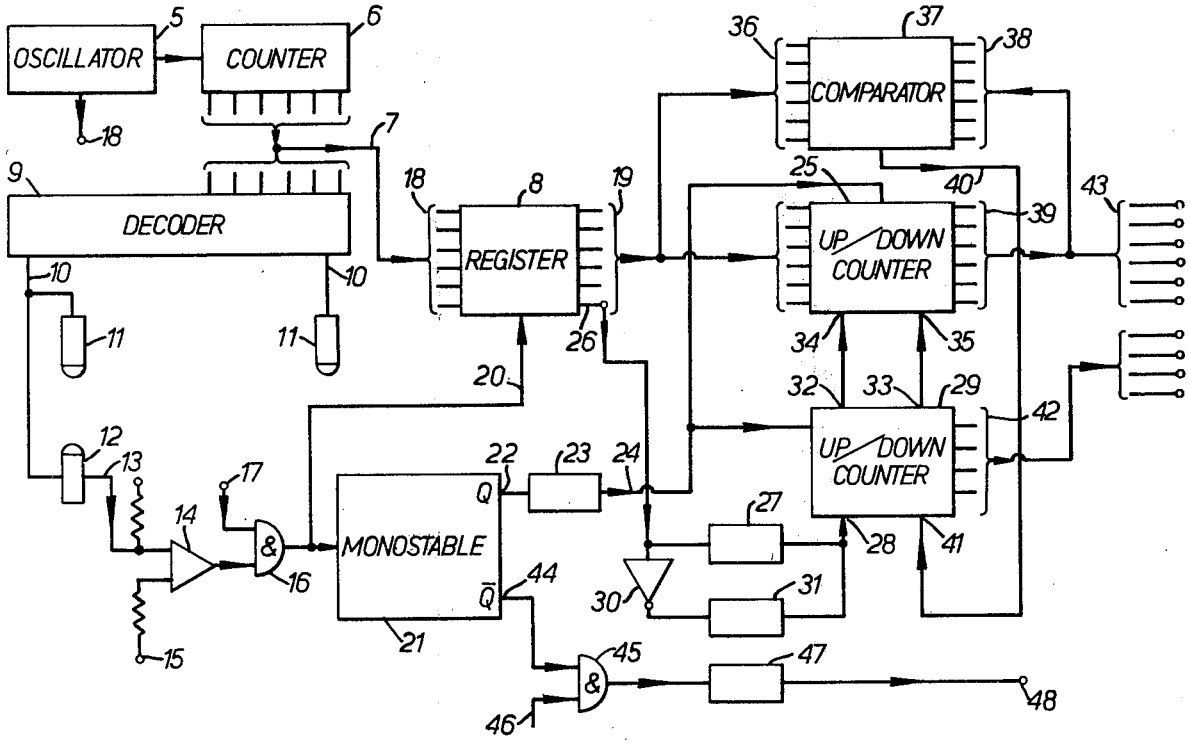
**14 Claims, 3 Drawing Figures**