Sept. 5, 1950 J. W. BRYCE ET AL 2,521,338

READING APPARATUS

Filed Sept. 19, 1946 6 Sheets-Sheet 1

Fig. 1.

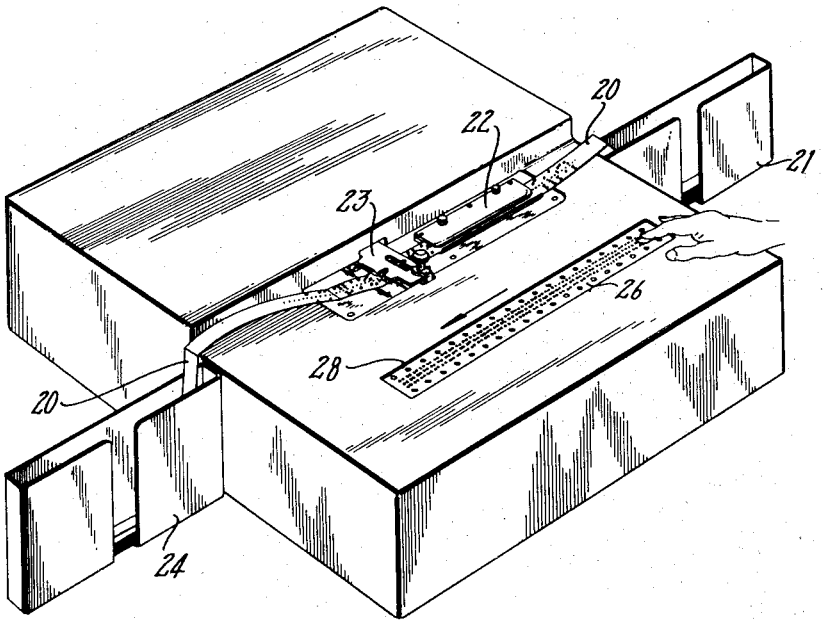

Fig. 3.

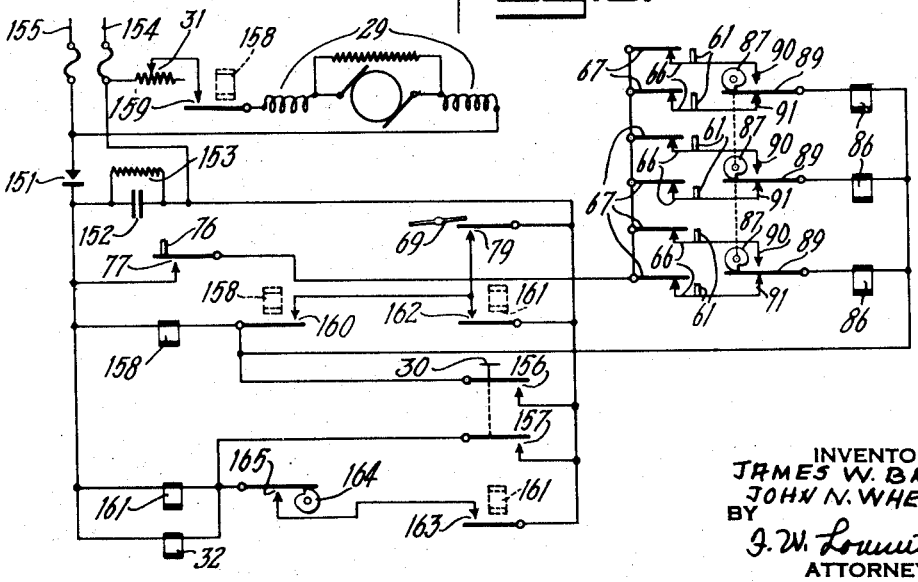

INVENTORS
JAMES W. BRYCE
JOHN N. WHEELER
BY
J. W. Lowenstein
ATTORNEY