US005111938A

United States Patent [19]

Soprano et al.

[11] Patent Number: 5,111,938

[45] Date of Patent: May 12, 1992

[54] SOLID WASTE CONTAINER

[75] Inventors: Toby L. Soprano, Floral Park; Benjamin J. Scolavino, Chester; Albert N. Caro, Essex Falls; Robert A. Angione, Emerson, all of N.J.

[73] Assignee: Segri-Gator Associates L.P., Montville, N.J.

[21] Appl. No.: 595,865

[22] Filed: Oct. 12, 1990

[51] Int. Cl.[5] B65D 81/20

[52] U.S. Cl. 206/386; 206/459; 206/524.8; 206/597; 220/371

[58] Field of Search ..... 206/386, 459, 595-600, 206/524.8; 220/1.5, 209, 371, 373, DIG. 15, DIG. 16

[56] References Cited

U.S. PATENT DOCUMENTS

2,279,155	4/1942	Wright	220/DIG. 16
2,314,963	3/1943	Zelnis	220/373
2,429,958	10/1947	Liebmann .	
2,656,090	10/1947	Hamblet .	
2,695,115	11/1954	Roop .	
3,476,287	11/1964	Kinnavy .	
3,618,814	11/1969	Nagroski .	
3,620,409	11/1971	Rosenbaum	206/524.8
3,753,731	8/1973	Christ .	
3,759,416	9/1973	Constantine .	
3,943,987	3/1976	Rossi	206/524.8
4,093,009	6/1978	Iavarone et al.	206/524.8
4,218,967	8/1980	Batchelor	206/524.8
4,416,374	11/1983	Smith et al. .	
4,434,891	3/1984	Skinner et al.	206/524.8
4,637,919	1/1987	Ryder et al.	220/371
4,643,314	2/1987	Kidd	206/386
4,722,451	2/1988	Conrad	206/524.8
4,756,425	7/1988	Wise .	
4,765,480	8/1988	Malmanger .	
4,838,443	6/1989	Cripe et al.	220/1.5
4,848,580	7/1989	Wise .	

OTHER PUBLICATIONS

Microclean Environmental Transport System. Rotonics Molding Inc., Chicago.

Primary Examiner—Jimmy G. Foster

Attorney, Agent, or Firm—McAulay Fisher Nissen Goldberg & Kiel

[57] ABSTRACT

A solid waste container has a container body with an open top which accepts a removable lid. The container also has a passage for evacuating air from within the container through a filter disposed at an inboard end of the passage. A check valve prevents air from re-entering the container through the passage. The container optionally includes integrally formed grooves for strapping the lid to the container, slots for allowing transport and handling using a fork truck, and handles for hand manipulation. Utilizing an evacuated container for transporting solid waste such as asbestos, prevents the discharge of particulates from the containers during handling and transport and thus, reduces the potential for exposure to such substances.
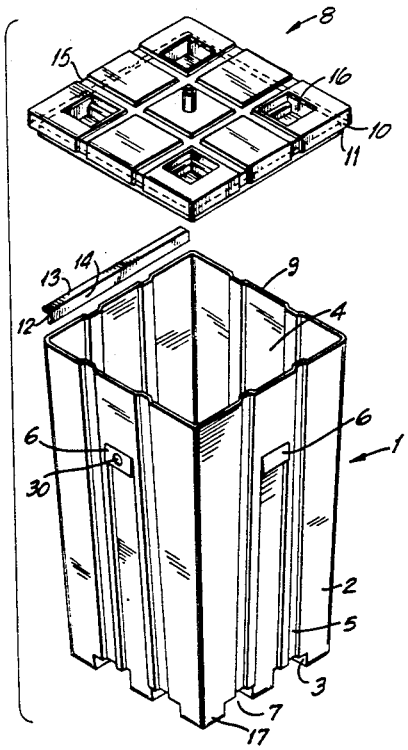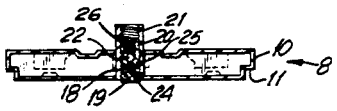
12 Claims, 4 Drawing Sheets