US009410438B2

(12) **United States Patent**
Yu

(10) **Patent No.: US 9,410,438 B2**
(45) **Date of Patent: Aug. 9, 2016**

(54) **DUAL ROTOR BLADES HAVING A METAL LEADING AIRFOIL AND A TRAILING AIRFOIL OF A COMPOSITE MATERIAL FOR GAS TURBINE ENGINES**

(71) Applicant: **PRATT & WHITNEY CANADA CORP.**, Longueuil (CA)

(72) Inventor: **Hong Yu**, Oakville (CA)

(73) Assignee: **PRATT & WHITNEY CANADA CORP.**, Longueuil, Quebec

(*) Notice: Subject to any disclaimer, the term of this patent is extended or adjusted under 35 U.S.C. 154(b) by 649 days.

(21) Appl. No.: **13/789,794**

(22) Filed: **Mar. 8, 2013**

(65) **Prior Publication Data**

US 2014/0255197 A1 Sep. 11, 2014

(51) **Int. Cl.**
F01D 5/28 (2006.01)
F01D 5/14 (2006.01)

(52) **U.S. Cl.**
CPC ***F01D 5/282*** (2013.01); ***F01D 5/146*** (2013.01); *F05D 2220/36* (2013.01); *Y02T 50/672* (2013.01); *Y02T 50/673* (2013.01); *Y10T 29/49332* (2015.01)

(58) **Field of Classification Search**
CPC F01D 5/14–5/142; F01D 5/146; F01D 5/28–5/288; Y02T 50/672; Y02T 50/673
USPC ..... 416/198 A, 229 A, 23, 124, 125, 212 A, 416/230, 223 R, 223 A, 247 R; 415/208.1, 415/209.1; 29/889.6
See application file for complete search history.

(56) **References Cited**

U.S. PATENT DOCUMENTS

2,406,460 A * 8/1946 Guerke B64D 35/04 416/129
3,850,545 A 11/1974 Weir
3,860,362 A 1/1975 Bentley et al.
3,867,062 A * 2/1975 Troller F01D 5/146 415/194
3,901,625 A 8/1975 Witzel
3,914,069 A 10/1975 Arrington et al.
3,915,591 A 10/1975 Aiki et al.
4,037,987 A 7/1977 Charles et al.
4,172,693 A 10/1979 Barton et al.
4,981,414 A * 1/1991 Sheets F01D 5/145 415/149.1
5,449,273 A * 9/1995 Hertel F01D 5/147 205/271
5,486,096 A * 1/1996 Hertel B64C 27/46 156/313
6,099,245 A * 8/2000 Bunker F01D 5/146 415/115
6,200,092 B1 * 3/2001 Koschier F01D 5/146 415/191
6,471,485 B1 * 10/2002 Rossmann ..... F01D 5/147 416/223 A
6,607,358 B2 8/2003 Finn et al.
7,736,131 B1 * 6/2010 Wilson, Jr. B82Y 30/00 416/226
7,997,870 B2 8/2011 Neumann
2005/0109011 A1 * 5/2005 Courtot F01D 5/146 60/39.093
2006/0018753 A1 * 1/2006 Menian F01D 5/146 416/175
2006/0093464 A1 * 5/2006 Moniz F01D 25/16 415/68
2008/0075602 A1 3/2008 Hill et al.
2011/0255987 A1 10/2011 Ou

* cited by examiner

Primary Examiner — Thomas Denion
Assistant Examiner — Laert Dounis
(74) *Attorney, Agent, or Firm* — Norton Rose Fulbright Canada

(57) **ABSTRACT**

A rotor dual-blade for a gas turbine engine that has a first blade component extending radially between a root and a tip and a second blade component, separate from the first component, extending radially between a root and a tip, wherein the second blade component is downstream, in series, of the first blade component and at least the first blade component is made of metal while the second blade component is a light weight composite material.
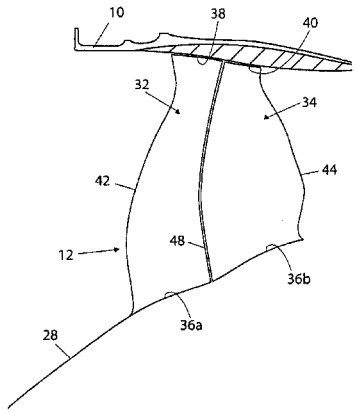
10 Claims, 3 Drawing Sheets