US009409538B2

(12) **United States Patent**
Gorman et al.

(10) **Patent No.: US 9,409,538 B2**
(45) **Date of Patent: Aug. 9, 2016**

(54) **INTEGRATED AIRBAG AND HVAC ASSEMBLY**

(71) Applicant: **GM GLOBAL TECHNOLOGY OPERATIONS LLC**, Detroit, MI (US)

(72) Inventors: **David J. Gorman**, Troy, MI (US); **Richard J. Lannen**, Royal Oak, MI (US)

(73) Assignee: **GM Global Technology Operations LLC**, Detroit, MI (US)

(*) Notice: Subject to any disclaimer, the term of this patent is extended or adjusted under 35 U.S.C. 154(b) by 89 days.

(21) Appl. No.: **14/143,206**

(22) Filed: **Dec. 30, 2013**

(65) **Prior Publication Data**

US 2015/0183390 A1 Jul. 2, 2015

(51) **Int. Cl.**

B60R 21/20	(2011.01)
B60H 1/00	(2006.01)
B60R 21/205	(2011.01)

(52) **U.S. Cl.**

CPC ***B60R 21/20*** (2013.01); ***B60H 1/00271*** (2013.01); ***B60H 1/00592*** (2013.01); ***B60R 21/205*** (2013.01); *B60H 2001/00214* (2013.01)

(58) **Field of Classification Search**

CPC .. B60R 21/20; B60R 21/205; B60H 1/00592; B60H 1/00271; B60H 2001/00214

See application file for complete search history.

(56) **References Cited**

U.S. PATENT DOCUMENTS

5,257,818	A	11/1993	Steffens, Jr.	
6,378,934	B1 *	4/2002	Palazzolo et al.	296/208
6,464,280	B1 *	10/2002	Shibata et al.	296/70
6,582,011	B2 *	6/2003	Palazzolo et al.	296/208
6,912,863	B2 *	7/2005	Tanaka et al.	62/244
6,988,764	B2 *	1/2006	Matsutani	296/193.02
7,325,827	B2 *	2/2008	Reiter	B60H 1/00564 280/728.2
7,731,261	B2 *	6/2010	Wenzel et al.	296/70
2001/0038200	A1	11/2001	Oehm	
2003/0001366	A1 *	1/2003	Debler	B60H 1/0055 280/732
2004/0094939	A1	5/2004	Debler et al.	
2005/0121890	A1	6/2005	Kong	
2006/0261581	A1 *	11/2006	Kansteiner	B60R 21/205 280/732

FOREIGN PATENT DOCUMENTS

DE	4225709	A1	2/1994
DE	102013213791	A1	1/2015
JP	07228214	A	8/1995
JP	09164861	A	6/1997

* cited by examiner

Primary Examiner — Ruth Ilan
Assistant Examiner — Joselynn Y Sliteris
(74) *Attorney, Agent, or Firm* — Quinn Law Group, PLLC

(57) **ABSTRACT**

An integrated airbag and heating, ventilation, and air conditioning (HVAC) assembly includes an airbag module and an HVAC unit. The airbag module includes an airbag housing and an inflatable bladder at least partially disposed in the airbag housing. The inflatable bladder is movable relative to the airbag housing between a stowed position and a deployed position. The HVAC unit includes an HVAC housing. The HVAC housing supports the airbag housing.
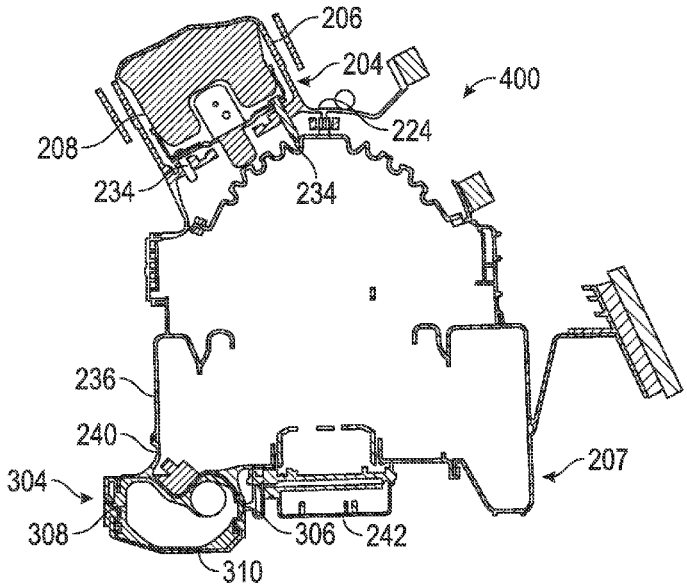
15 Claims, 6 Drawing Sheets